legrand
legrand

POKE-THRU FINISH OPTIONS

Aluminum Flange with Nonmetallic Aluminum Cover*

Aluminum Flange with Nonmetallic Black Cover

Black Painted Flange with Nonmetallic Black Cover

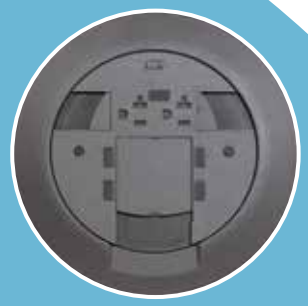

Gray Painted Flange with Nonmetallic Gray Cover

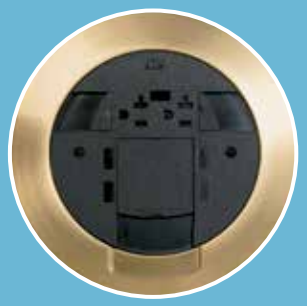

Brass Flange with Nonmetallic Black Cover

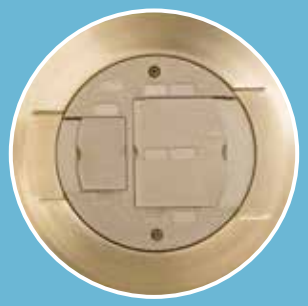

Brass Flange with Nonmetallic Brass Cover

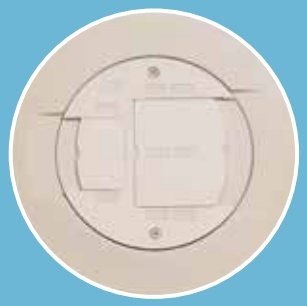

Ivory Painted Flange with Nonmetallic Ivory Cover

EVOLUTION™ SERIES POKE-THRU FINISH OPTIONS

Bronze Painted Flange and Cover

Nickel Painted Flange and Cover

Brass Painted Flange and Cover

Gray Painted Flange and Cover

Black Painted Flange and Cover

Aluminum Painted Flange and Cover**

Satin Brass Painted Flange and Cover**

Satin Chrome Painted Flange and Cover**

***RC4, AV3, AND AMD8 SERIES ONLY**
****EVOLUTION SERIES 10" ONLY**

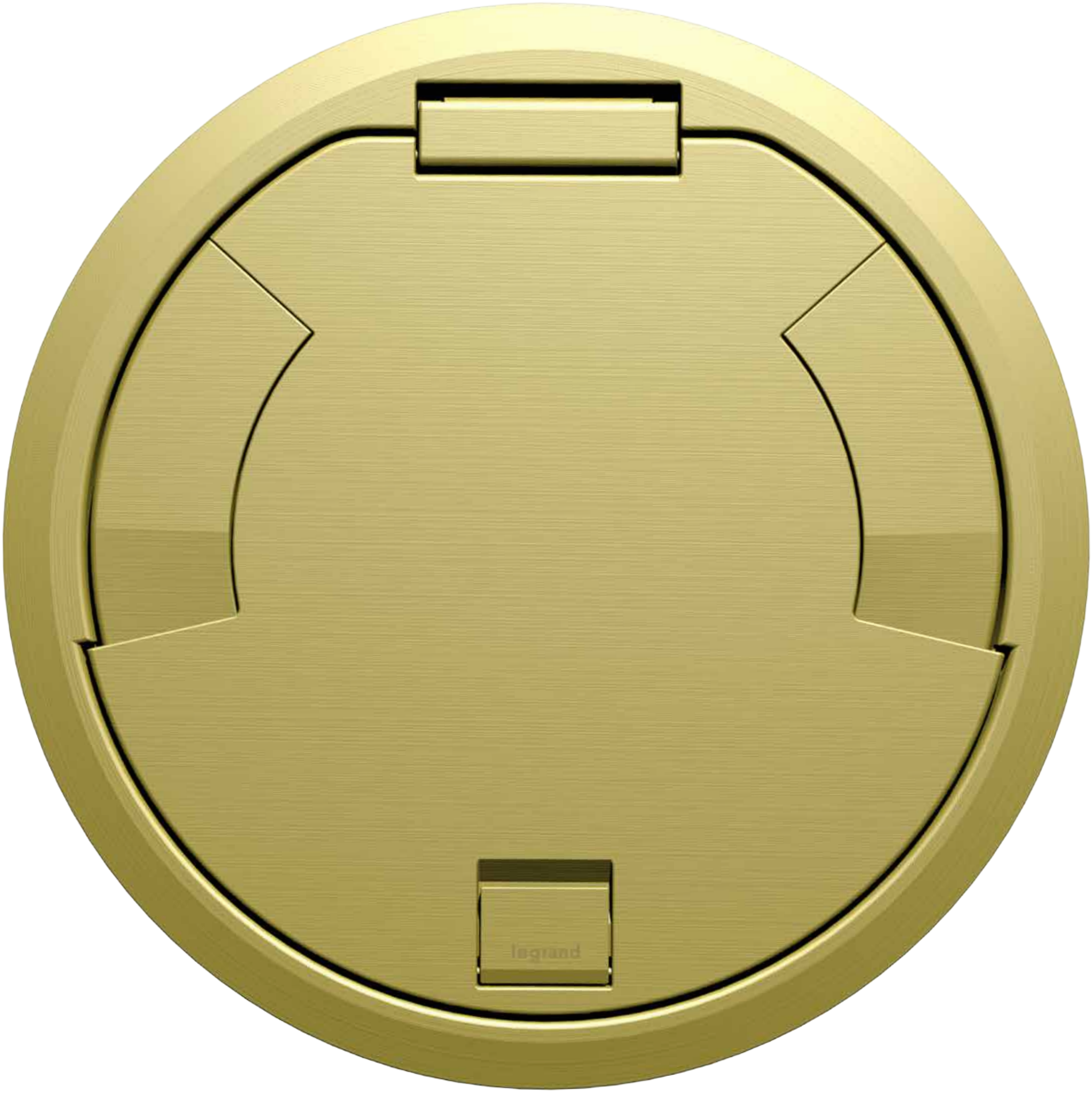
legrand

10" Evolution™ Series

An industry first
8-gangs of capacity.

The Evolution Series 10" Poke-Thru device offers more flexibility, versatility and capacity than any other poke-thru device on the market, featuring 8-gangs of capacity with maximum configurability.

An improved cover design features spring-loaded slide egress doors that automatically close around connections when the cover is closed.

Generous internal capacity accommodates wiring connections inside the unit, eliminating junction boxes and simplifying moves, adds and changes.

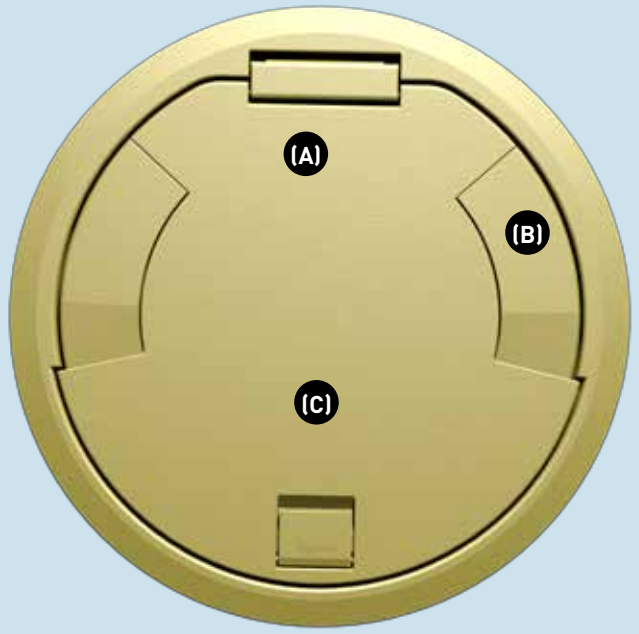

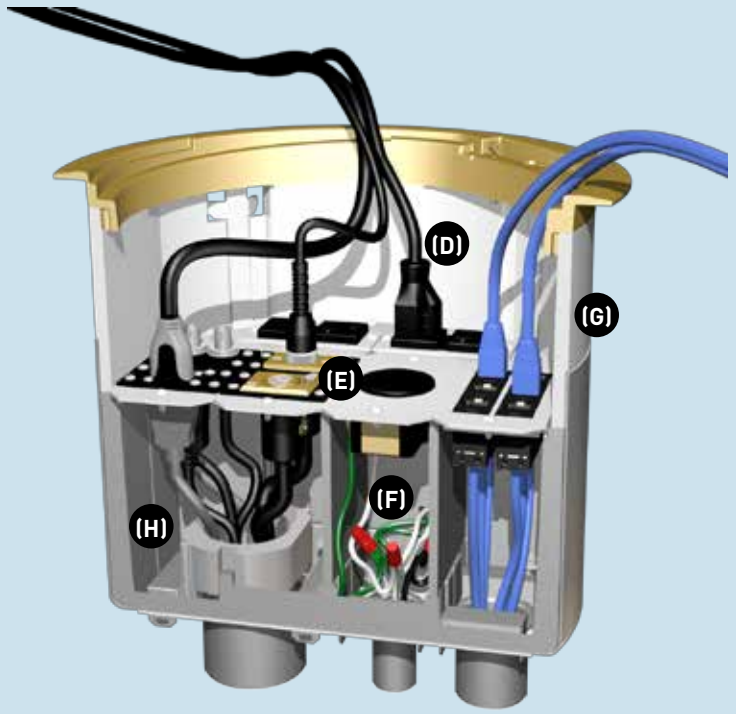

(A) Smarter design has a more balanced symmetrical look with a stronger, durable hinge that enables easier cover operation.

(B) Slide egress doors auto-close around cables reducing trip hazards and improving aestethics.

(C) Multiple finish options that will match and compliment any decor

(D) Fully finished interior with devices that are recessed 4 1/2" [114mm] below the surface to allow for 30A turnlok devices.

(E) Largest Capacity poke-thru on the market, to accommodate 8-gangs for power, communications, and Audio/Video services.

(F) No Junction Box required, The Evolution 10" Series poke-thru device is the first poke-thru developed that can accommodate wiring connections inside the unit, making it easier to install and maintain.

(G) UL listed and classified to maintain up to a 2-hour fire rating.

(H) Depth behind the plates, the deepest in the industry with 4 3/4" [120mm] of space for most manufacturers A/V devices.

legrand®

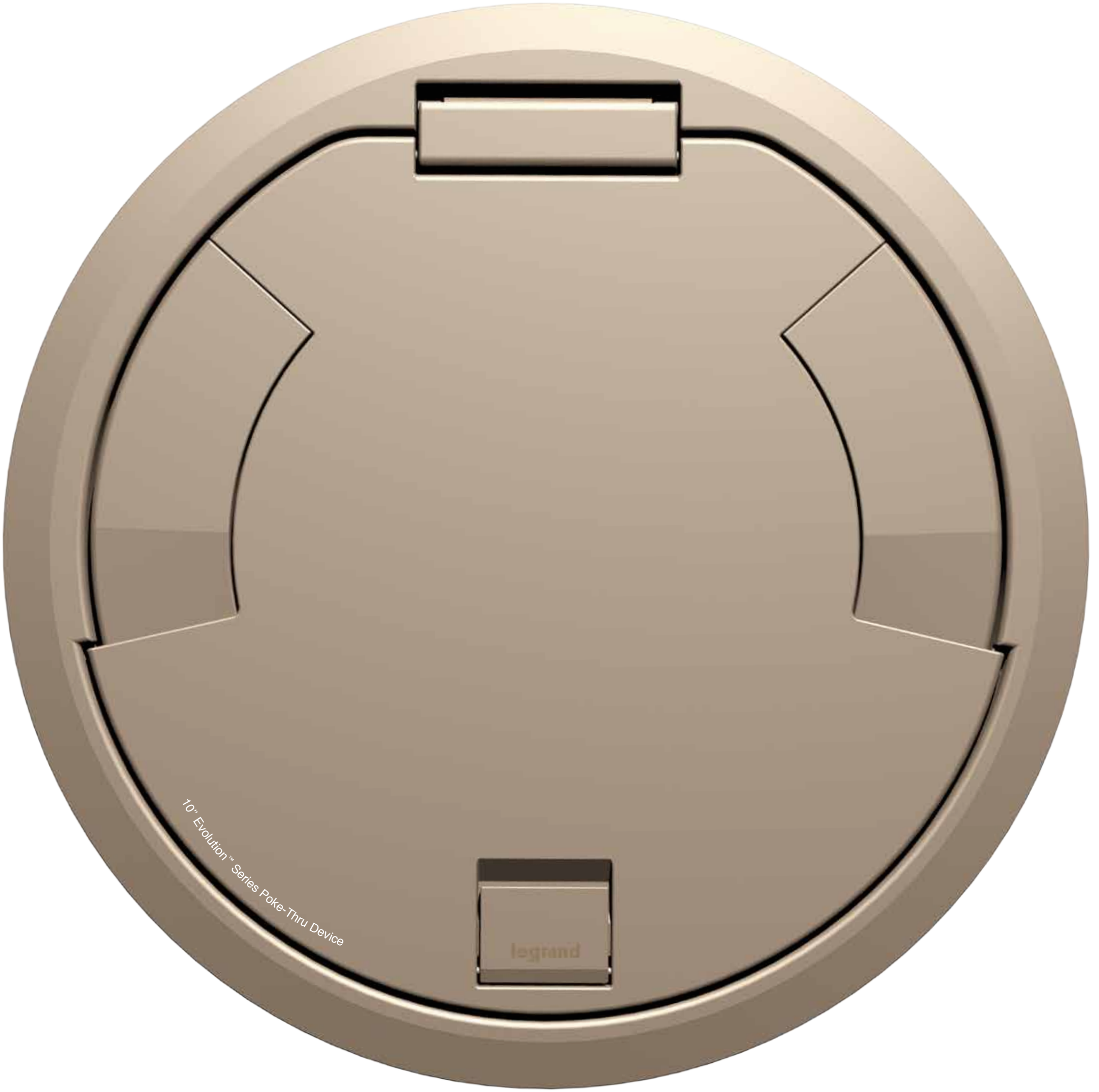
10" Evolution™ Series Poke-Thru Device
legrand

8AT Evolution™ Series

The largest dual service recessed poke-thru device

The Evolution Series Poke-Thru Device is a recessed unit that provides the maximum power, communications, and A/V services at the workstation. The 8AT series has 4 gang of capacity that accommodates power, communications, and A/V in each location. The Evolution series has been designed to accept Extron® Electronics MAAP and AAP series devices. The 8AT series is available in a prewired option which comes with (2) 20A prewired receptacles and an unwired option that allows for maximum configurability.

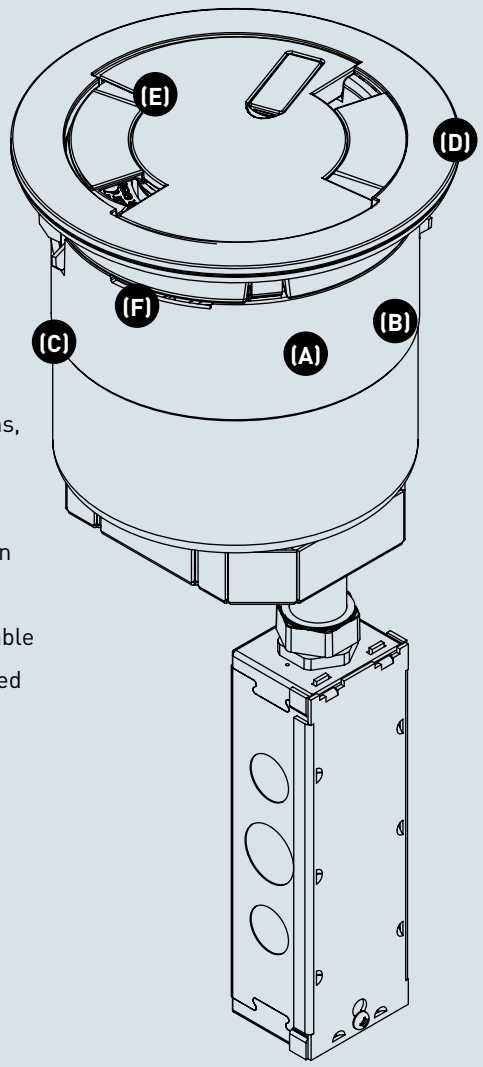

(A) Accepts both the Pass & Seymour® Network Wiring inserts and Ortronics® TracJack® and Series II modular inserts.

(B) Each receptacle can be wired as a separate circuit and can be wired as a standard or isolated ground device.

(C) 8AT Series requires an 8" [203mm] core hole. Minimum hole diameter 8" [203mm]

(D) Service Head diameter 9 1/4" [235mm] Total depth 16 3/4" [425mm]

(E) All metal covers, with spring loaded slide egress doors.

(F) Finished interior.

legrand®

8" Evolution™ Series Poke-Thru Device

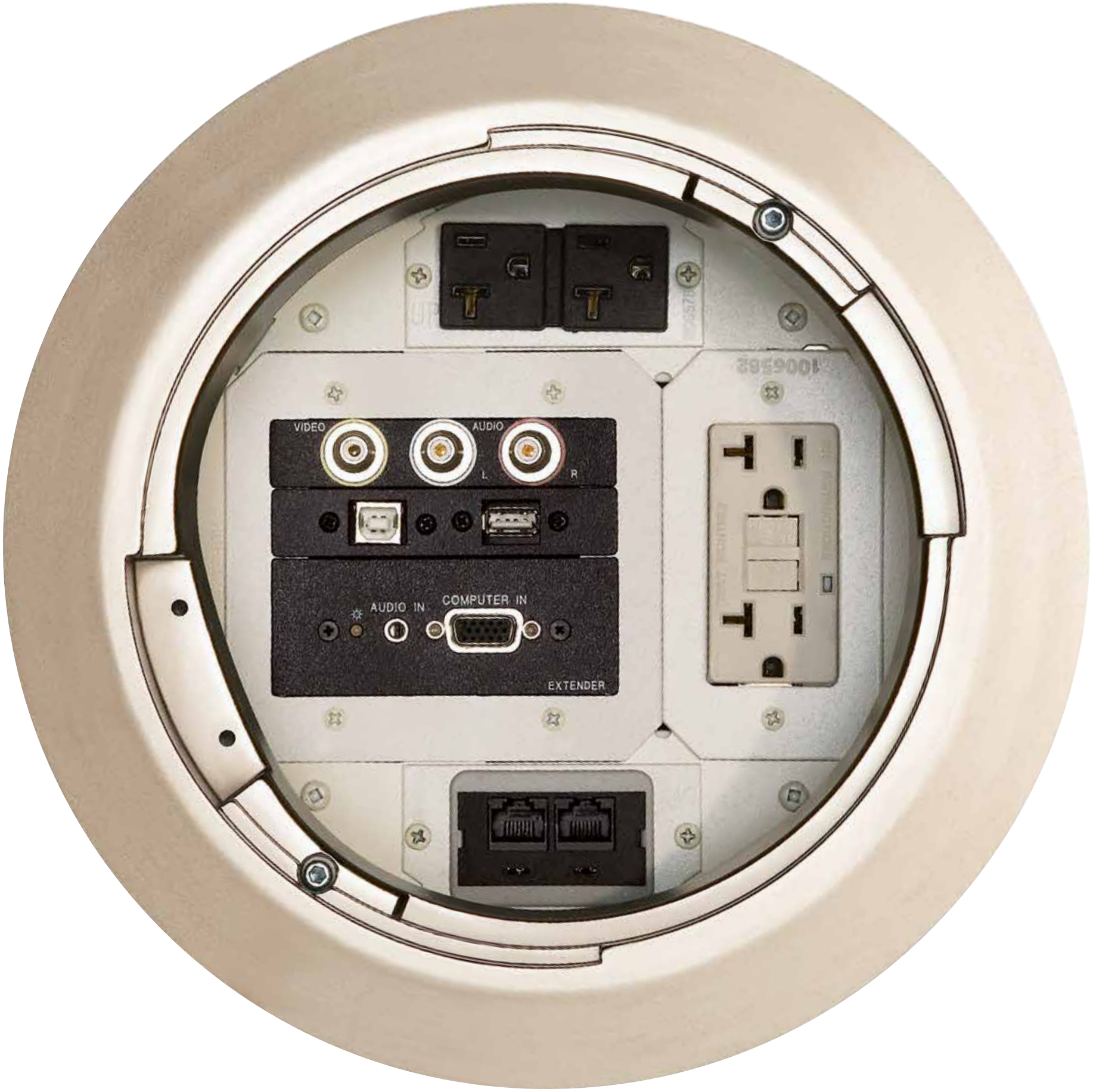
VIDEO
AUDIO
L
R
AUDIO IN
COMPUTER IN
EXTENDER

6AT Evolution™ Series

Evolve into the newest design in poke-thru technology

The Evolution Series Poke-Thru Device is a recessed unit that provides the maximum power, communications, and A/V services at the workstation. The 6AT series has 2 1/2 gang of capacity that accommodates power, communications, and A/V in each location. The Evolution series has been designed to accept Extron® Electronics MAAP and AAP series devices. The 6AT series is available in a prewired option which comes with (2) 20A prewired receptacles, a prewired A/V version that comes with (1) 20A prewired and an unwired option that allows for maximum configurability.

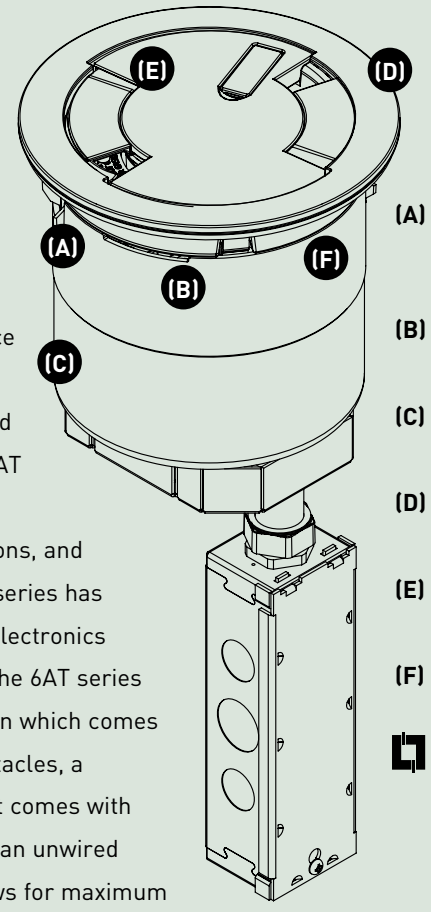

(A) Accepts both the Pass & Seymour® Network Wiring inserts and Ortronics® TracJack® and Series II modular inserts.

(B) Each receptacle can be wired as a separate circuit and can be wired as a standard or isolated ground device.

(C) 6AT Series requires a 6" [162mm] core hole. Minimum hole diameter 6" [152mm]

(D) Service Head diameter 7 1/4" [184mm] Total depth 16 3/4" [425mm]

(E) All metal covers, with spring loaded slide egress doors.

(F) Finished interior.

legrand®

6'' Evolution™ Series Poke-Thru Device

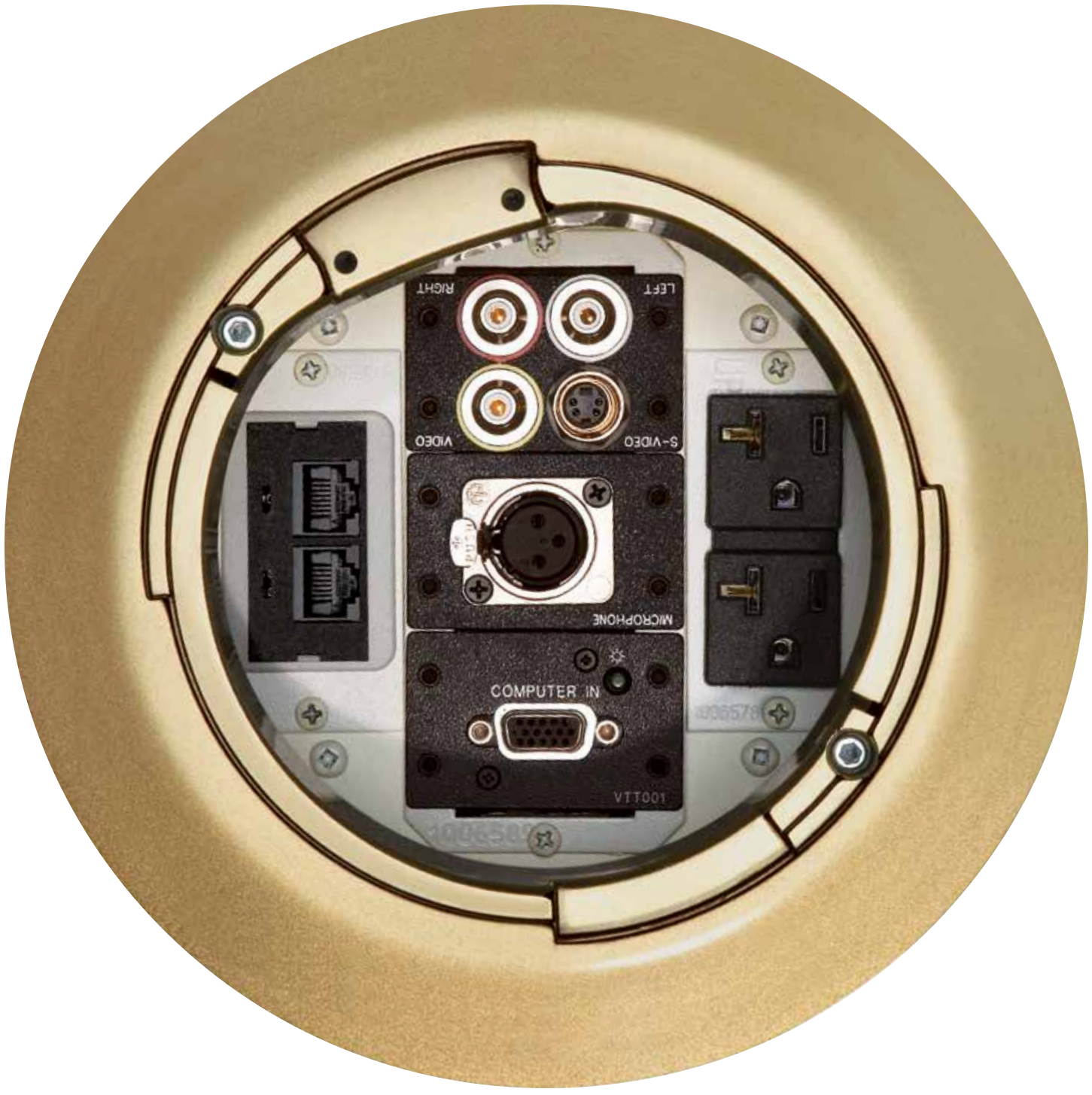
RIGHT
LEFT
VIDEO
S-VIDEO
MICROPHONE
COMPUTER IN
VTT001

6ATCFF Evolution™ Series

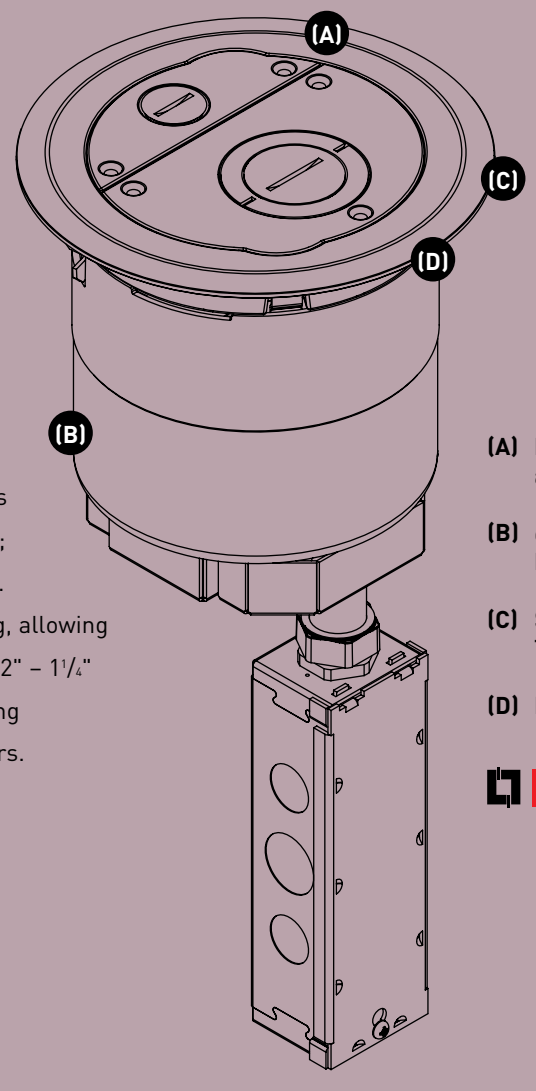

The industry's largest dual capacity poke-thru device for furniture feed applications

Need to feed large quantities of power, communication, and A/V cables to modular furniture in an open space; the 6ATCFF is the right choice for you. It provides (1) one ¾" conduit opening, allowing (10) ten #10 AWG conductors, and a 2" – 1¼" concentric conduit opening, allowing for up to 28 category 6A conductors.

(A) Power and communication compartments can be accessed independently.

(B) 6ATCFF Series requires a 6" [162mm] core hole. Minimum hole diameter 6" [152mm]

(C) Service Head diameter 7¾" [197mm] Total depth 16¾" [425mm]

(D) Installs in carpet, tile, or wood covered floors.

legrand®

RC4 Series

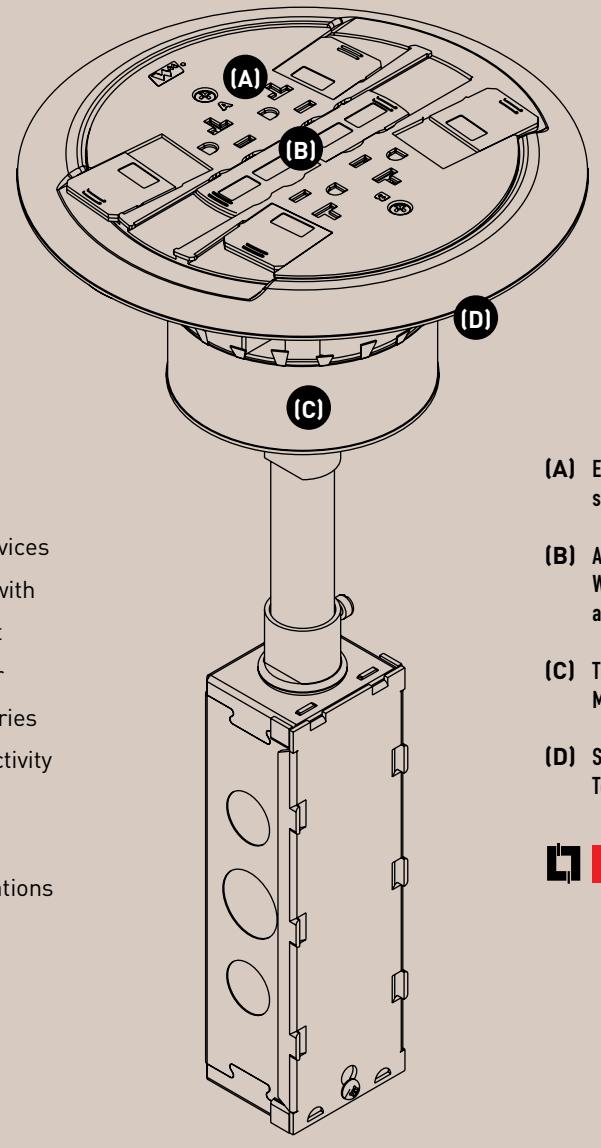

High capacity dual service flush poke-thru device

The RC4 Series poke-thru device delivers significant power and communication services directly to the workstation. It is supplied with two prewired 20A duplex receptacles that can be wired in the field as a standard or isolated ground receptacle. The RC4 Series also accepts up to four ports of connectivity devices to provide a seamless and aesthetically pleasing interface for voice, data, and fiber optic applications at the point of use.

(A) Each duplex receptacle is wired as a separate circuit.

(B) Accepts both the Pass & Seymour® Network Wiring inserts and Ortronics® TracJack® and Series II modular inserts.

(C) The RC4 requires a 4" [102mm] cored hole. Minimum hole diameter: 4 1/16" [103mm]

(D) Service head diameter: 8 1/4" [210mm] Total depth: 16 3/8" [416mm]

legrand®

4FFATC15 Series

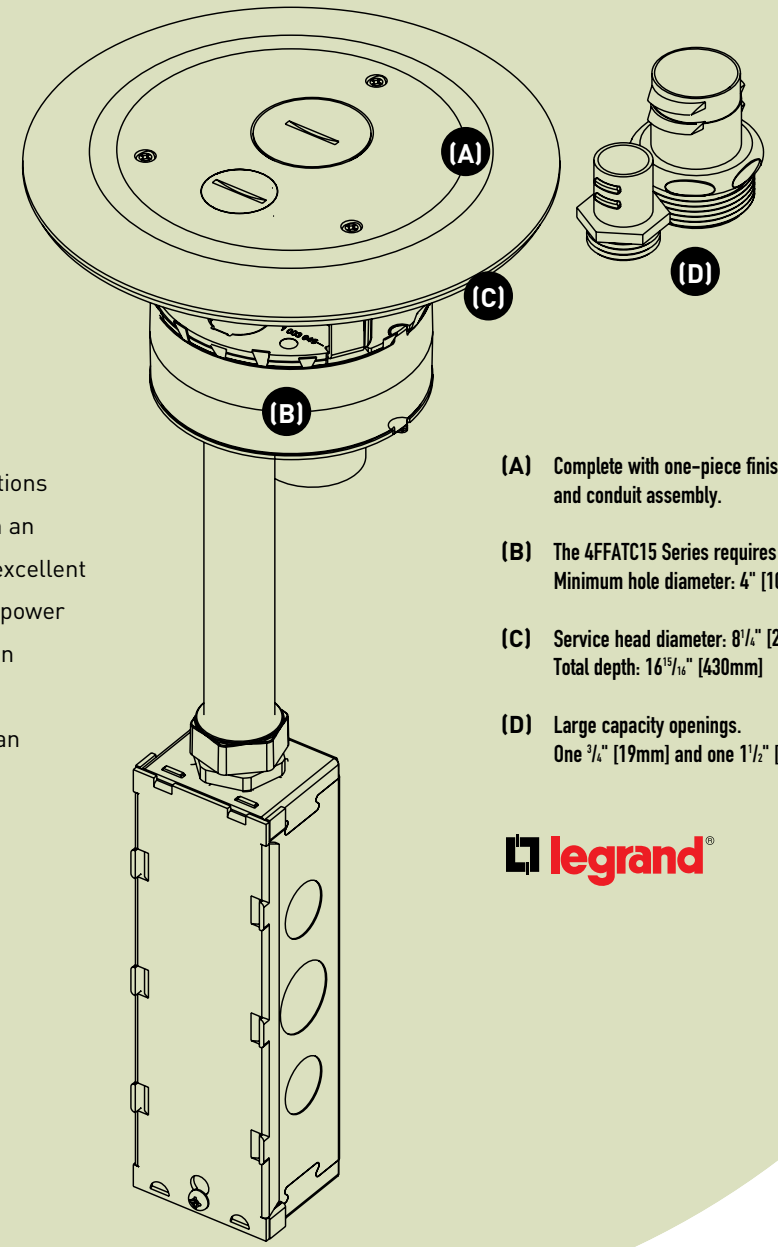

Large dual service capacity for furniture feed applications

For feeding both power and communications services to modular furniture systems in an open space, the 4FFATC15 Series is an excellent solution. It provides one ¾" opening for power and one 1½" opening for communication cabling. Perfect for new and retrofit construction, the 4FFATC15 Series can be installed on tile, carpet, or wood covered floors.

(A) Complete with one-piece finish flange and conduit assembly.

(B) The 4FFATC15 Series requires a 4" [102mm] cored hole.
Minimum hole diameter: 4" [102mm]

(C) Service head diameter: $8^{1}/_{4}$" [210mm]
Total depth: $16^{15}/_{16}$" [430mm]

(D) Large capacity openings.
One $^{3}/_{4}$" [19mm] and one $1^{1}/_{2}$" [38mm]

legrand®

AV3 Series

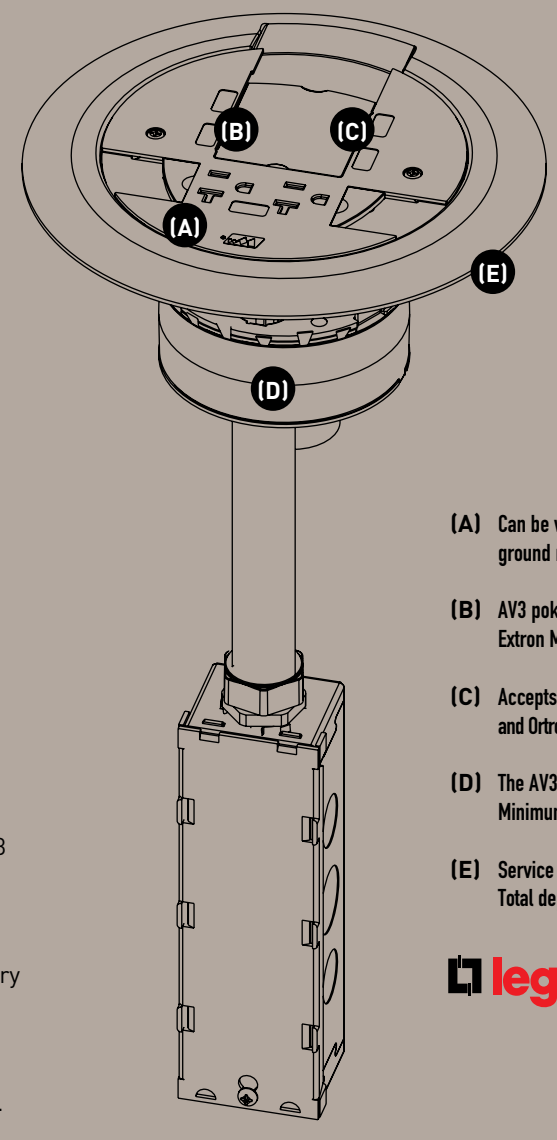

Audio/video connectors in a flush poke-thru device

Designed for audio and video applications, the AV3 Series poke-thru device accepts Extron® Electronics MAAP Series mini architectural adapter plates that support video, audio, control, voice, and data connectors, as well as active modules such as VGA line drivers, audio buffers, and twisted pair transmitters. The AV3 Series is supplied with a prewired 20A duplex power receptacle and holds up to four ports of industry standard and proprietary data/communications connectivity devices.

(A) Can be wired in the field as either a standard or isolated ground receptacle.

(B) AV3 poke-thru device holds up to 3-single gang Extron MAAP adapter plates.

(C) Accepts Pass & Seymour® Network Wiring inserts and Ortronics® TracJack® and Series II modular inserts.

(D) The AV3 requires a 4" [102mm] cored hole. Minimum hole diameter: 4 1/16" [103mm]

(E) Service head diameter: 8 1/4" [210mm] Total depth: 17" [432mm]

legrand®

RC7 Series

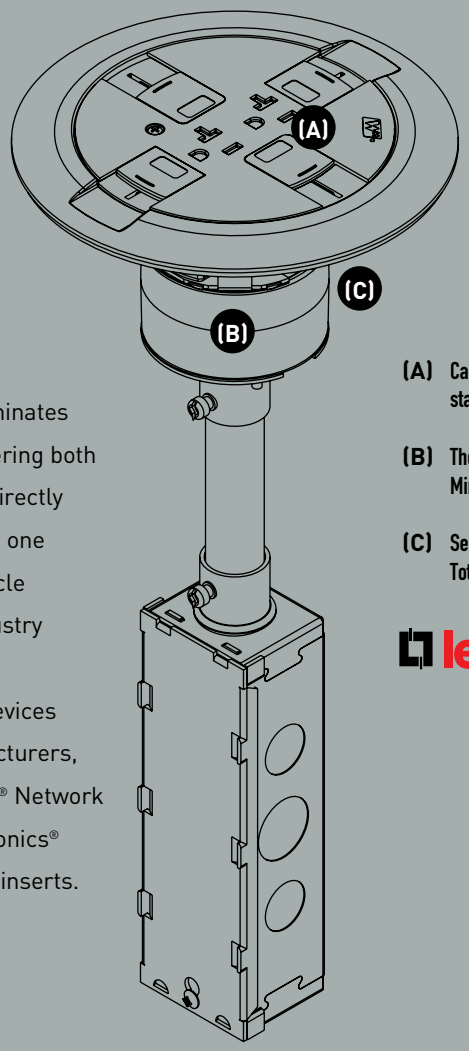

Economical flexibility in a single poke-thru device

The RC7 Series poke-thru device eliminates the need for a second device by delivering both power and communication services directly to the workstation. It is supplied with one prewired 20A duplex power receptacle and accepts up to two ports of industry standard and proprietary data/ communications connectivity devices from a wide range of manufacturers, including Pass & Seymour® Network Wiring inserts and Ortronics® TracJack® modular inserts.

(A) Can be wired in the field as either a standard or isolated ground receptacle.

(B) The RC7 requires a 3" [76mm] cored hole. Minimum hole diameter: $3^{1}/_{16}$" [78mm]

(C) Service head diameter: 7" [178mm] Total depth: $16^{1}/_{2}$" [419mm]

legrand®

RC9 Series

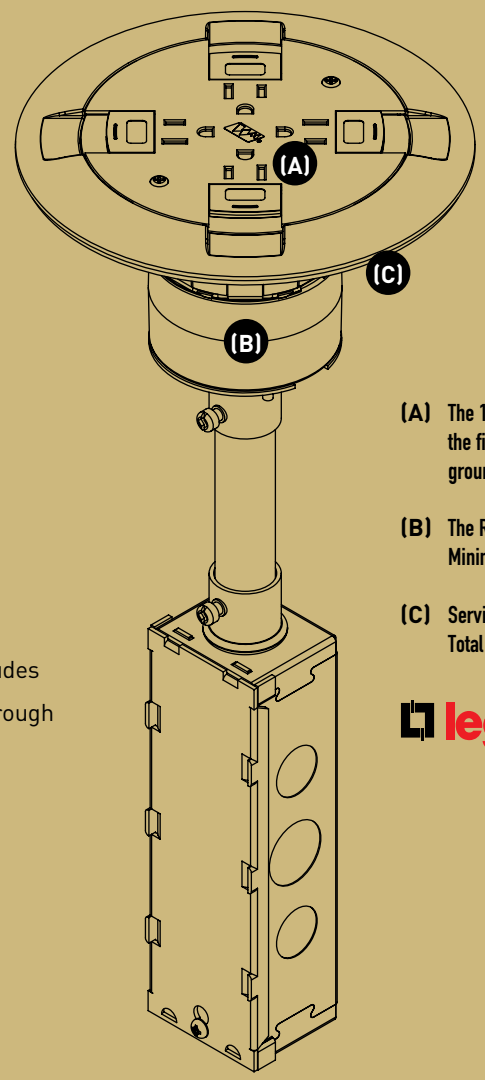

All the power, right where it's needed

The RC9 Series poke-thru device is an all-power unit that provides plenty of electric service right at the workstation. This device is supplied with a prewired 15A quad receptacle. The cover includes two openings for UTP pass-through capability.

(A) The 15A quad receptacle can be wired in the field as either a standard or isolated ground receptacle.

(B) The RC9 requires a 3" [76mm] cored hole. Minimum hole diameter: 3 1/16" [78mm]

(C) Service head diameter: 7" [178mm] Total depth: 16 1/2" [419mm]

legrand®

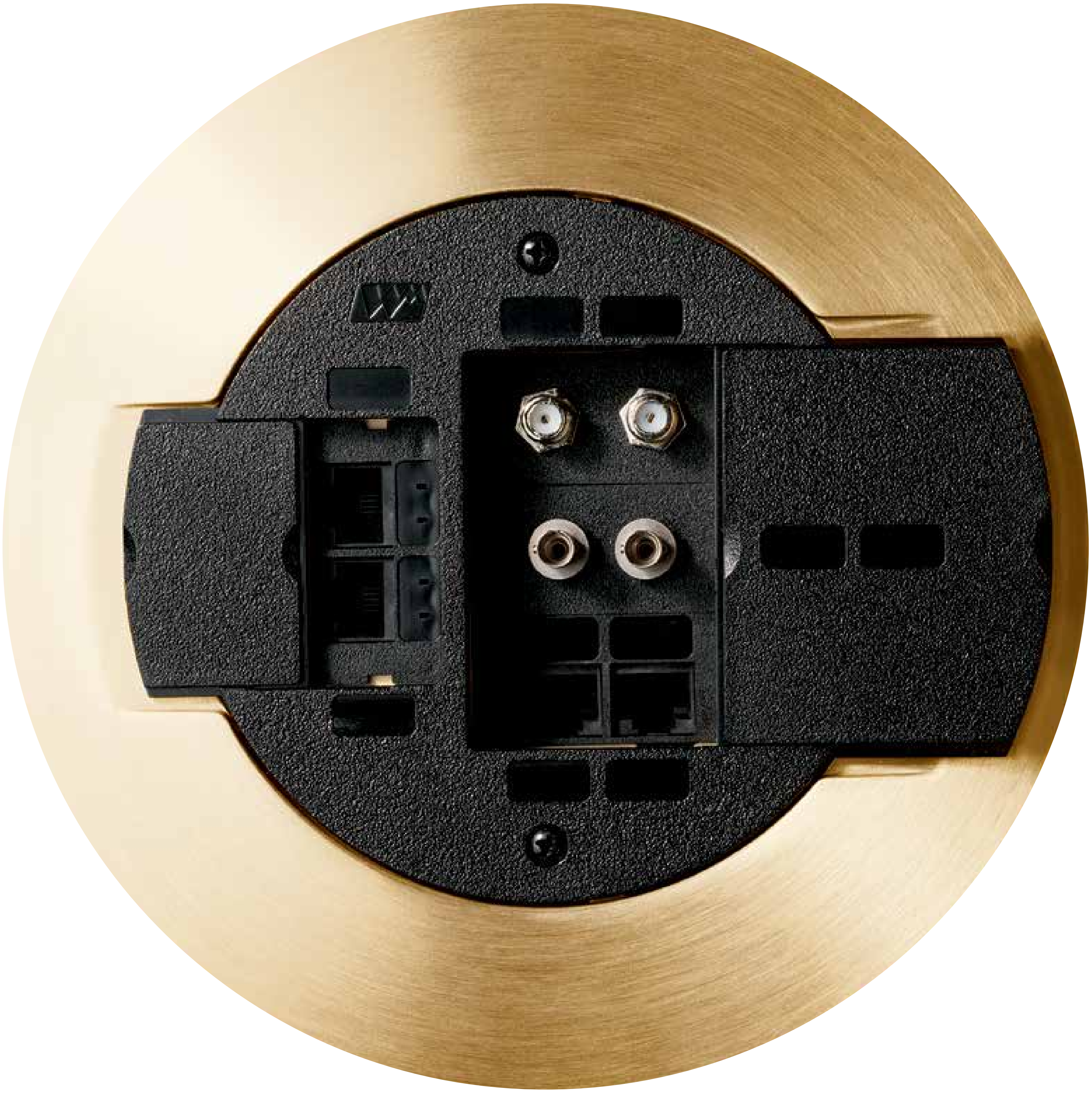

AMD8 Series

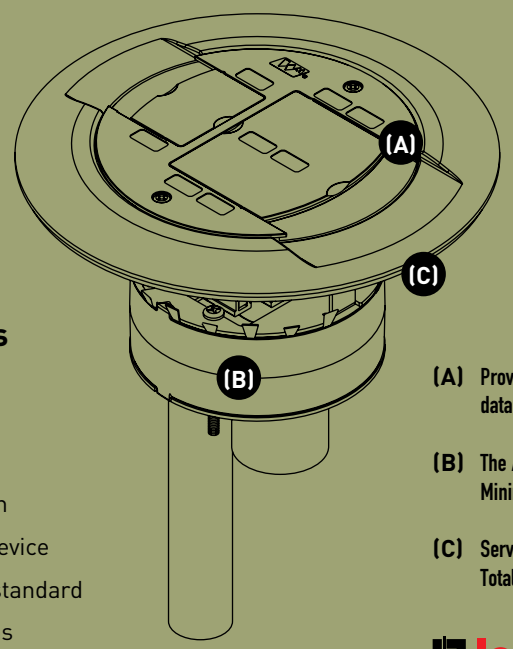

Maximum communications in a flush poke-thru device

The AMD8 is a large capacity all-communication poke-thru device, providing multiple data/communication connections at the workstation. This device accepts up to eight ports of industry standard and proprietary data/communications connectivity devices from a wide range of manufacturers, including Pass & Seymour® Network Wiring inserts and Ortronics® TracJack® and Series II modular inserts.

(A) Provides a seamless interface for voice, data, and fiber optic applications.

(B) The AMD8 requires a 4" [102mm] cored hole. Minimum hole diameter: $4^{1}/_{16}$" [103mm]

(C) Service head diameter: $7^{1}/_{2}$" [191mm]
Total depth: $9^{3}/_{4}$" [248mm]

legrand®

ADVANCED POKE-THRU TECHNOLOGY

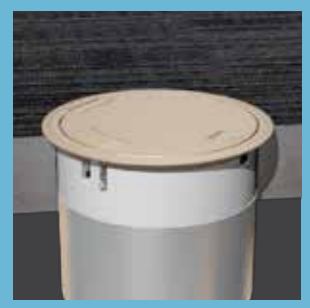

(A) Poke-thru devices enable wiring and cabling to be located virtually anywhere, using core-drilled openings while also maintaining the fire rating of the slab.

(B) Exclusive TopGuard™ protection meets and exceeds UL scrub water exclusion requirements by preventing water, dirt, and debris from entering power and communication compartments.

(C) Power, communication, and A/V devices are protected by slide cover technology which remains closed when not in use.

(D) Wiremold poke-thru devices feature quick and easy “step-on-it” installation without the need for additional fasteners or a second installer.

(E) Wiremold poke-thru devices are suitable for 1-, 1½- and 2-hour rated floor assemblies and for use in air handling spaces. Trim flanges are beveled so these devices meet ADA Accessibility Guidelines for changes in surface levels.

legrand®

www.legrand.us/poke-thru

designed to be better.™

Electrical Wiring Systems

60 Woodlawn Street
West Hartford, CT 06110
1.877.BY.LEGRAND (295.3472)
www.legrand.us

570 Applewood Crescent
Vaughan, Ontario L4K 4B4
905.738.9195
www.legrand.ca

FOLLOW US

©2015 Legrand All Rights Reserved ED1310R5 08|15

www.legrand.us/poke-thru *Visit our web site for the latest product specifications.*