PRODUCT SPECIFICATION

CATALOG NUMBER:	90188802		
DESCRIPTION:	12/3 STW 125V/15A straight blade outdoor use "Y"-adapter cord set		
APPROVALS:	UL/CUL Listed		
CASE QTY:	12	**UPC:**	0 29892 09018 0

CONSTRUCTION PARAMETERS:

Conductors:	12 AWG bare copper, 65/30 stranding
Jacket material:	PVC, yellow
Overall cable O.D. (nom):	0.585"

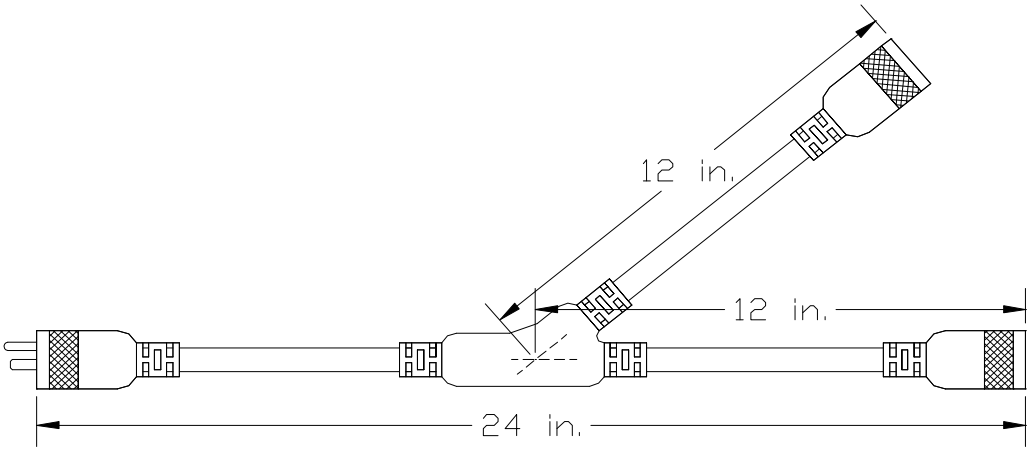

Note: Plug and connector style may vary

Attachment plug configuration:	NEMA 5-15P
Cord connector configuration:	NEMA 5-15R x 2
Plug and connector material:	PVC, black

ELECTRICAL PROPERTIES:

Temperature rating:	-40 to +60 ^{o}C
Nominal operating voltage:	125 VAC
Maximum operating current:	15 A
Maximum operating wattage:	1875 W

This product complies with European Directive 2011/65/EU (RoHS-2)

The information presented here is, to the best of our knowledge, true and accurate. However, since conditions of use are beyond our control, all recommendations or suggestions are presented without guarantee or responsibility on our part.

We disclaim all liability in connection with the use of information contained herein or otherwise.

This specification is the proprietary intellectual property of Southwire Company LLC. Any information contained herein shall not be disclosed to any party without the written consent of Southwire Company LLC.