DRAWING NO. SE212356

REV	DATE	DESCRIPTION	ECO	BY	C'H'K.
E	05/08/2017 00:00:00 AM	LOGO UPDATION	46692	BK	MB

CATALOG. NO.	CONDUCTOR CODE (AWG)	CONDUCTOR NAVY 5	BOLT SIZE	FIG. NO.	DIMENSIONS B ±.03	C +.04 -.02	H REF.	K DIA. ±.02	L ±.06	N ±.04	O.D. ±.01	T REF.	Z MIN.
YAZ6CTC38	#6 STR #6 SOL	30	3/8 [M10]	1	1.12 [28]	.58 [15]	--	.40 [10]	2.21 [56]	.41 [10]	.29 [7]	.06 [2]	.42 [11]
YAZ6CTC3845				2			1.18 [30]		1.96 [50]				
YAZ6CTC3890 10				3			1.46 [37]		1.05 [27]				
YAZ6CTC12			1/2 [M12]	1		.75 [19]	--	.52 [13]	2.46 [62]	.53 [13]		.12 [3]	.55 [14]
YAZ6CTC1245				2			1.20 [30]		2.34 [59]				
YAZ6CTC1290 10	#6 STR #6 SOL	30		3	1.12 [28]		1.57 [40]		1.33 [34]		.29 [7]		

CATALOG. NO.	INSTALLATION TOOLING (# CRIMPS) DIE INDEX	COLOR CODE	MECHANICAL MD7-34R MD6	OUR840	Y8MRB-1 Y1MRTC 6 Y122CMR	HYDRAULIC BCT500 Y500CT	Y34A 8	Y750 Y35, Y39	Y46 4	Y45 3	DIELESS (# CRIMPS)	WIRE STRIP LENGTH
YAZ6CTC38	7 OR 374	BLUE	W5CVT W5CRT (2)	W5CVT W5CRT (2)	BLUE (2)	W5CVT W5CRT (2)	A5CR (2)	U5CRT U8CABT (2)	U5CRT U8CABT (2)	U5CRT U8CABT (2)	MECHANICAL: MY29-11(1) HYDRAULIC Y644, Y644M Y644MBH 9	1-3/16
YAZ6CTC3845												
YAZ6CTC3890 10												
YAZ6CTC12												
YAZ6CTC1245												
YAZ6CTC1290 10	7 OR 374	BLUE	W5CVT W5CRT (2)	W5CVT W5CRT (2)	BLUE (2)	W5CVT W5CRT (2)	A5CR (2)	U5CRT U8CABT (2)	U5CRT U8CABT (2)	U5CRT U8CABT (2)		1-3/16

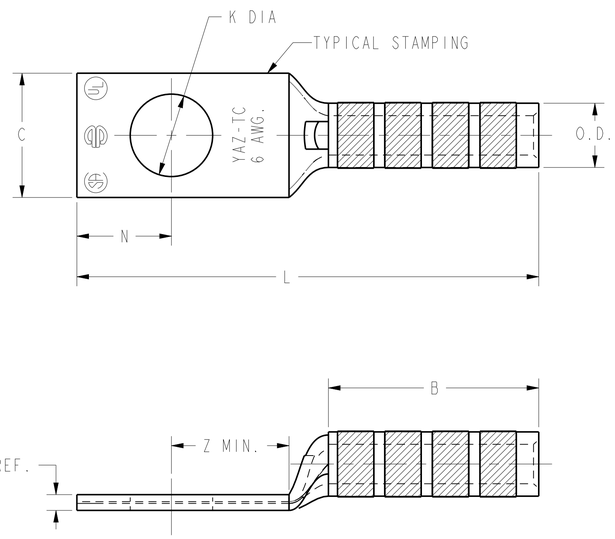

FIG. 1

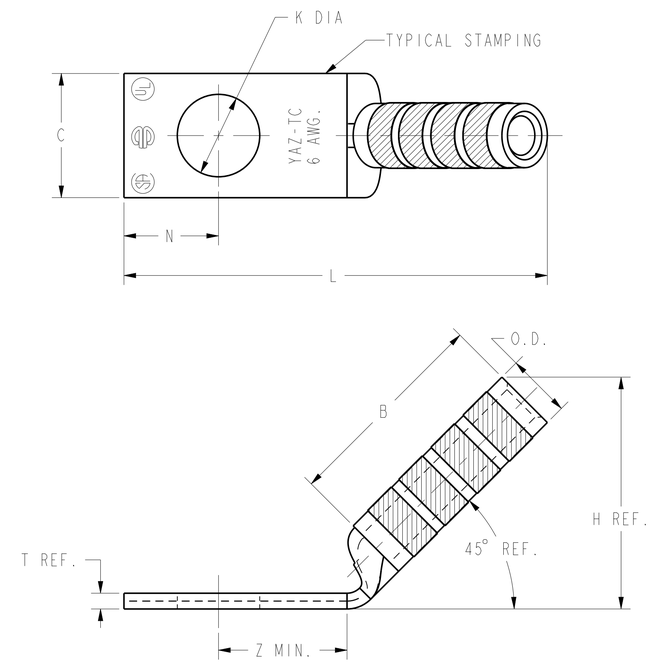

FIG. 2

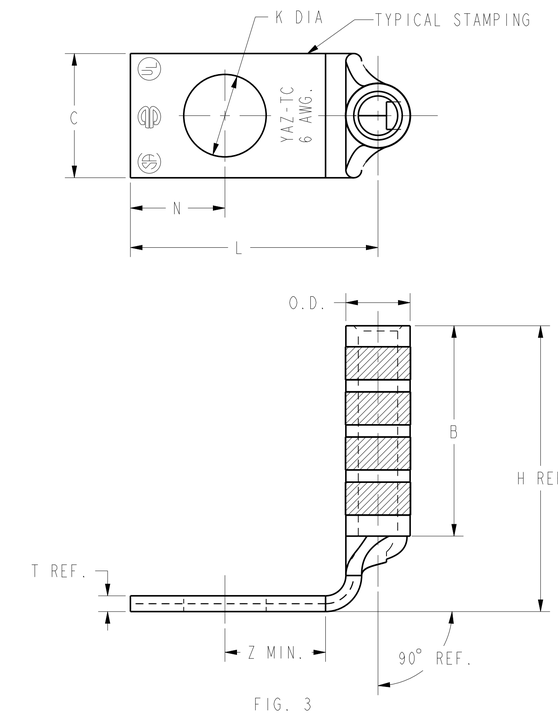

FIG. 3

NOTES:

1. MATERIAL: COPPER TUBING.
2. FINISH: TIN PLATED
3. CATALOG # PT6515 ADAPTOR IS REQUIRED TO USE "U" DIES IN Y45 SERIES TOOLS.
4. CATALOG # PUADP-1 ADAPTOR IS REQUIRED TO USE "U" DIES IN Y46 SERIES TOOLS.
5. NAVY CABLE SIZE MAY BE OMITTED ON SOME SIZES BECAUSE OF SPACE LIMITATIONS.
6. PERMANENT DIE IN TOOLING.
7. DIMENSIONS, METRIC WIRE, & METRIC BOLT SIZES IN BRACKETS [ ] ARE IN MILLIMETERS. DIMENSIONS ARE ROUNDED OFF TO THE NEAREST MILLIMETER, UNLESS OTHERWISE NOTED, AND ARE FOR REFERENCE ONLY.
8. FOR USE BY CUSTOMERS THAT HAVE THIS HYPRESS™. NO NEW Y34A HYPRESS™ TOOLS ARE BEING PROCESSED.
9. DO NOT USE PAT644 OR Y644 TOOLING WITH 6 AWG SOL.
10. THESE CONNECTORS CANNOT BE INSTALLED WITH Y45 TOOLING.

TO ORDER BURNDY® PRODUCTS CALL

UNITED STATES
1-800-346-4175 (LONDONDERRY, NH)

CANADA:
1-800-361-6975 (QUEBEC)
1-800-387-6487 (ALL OTHER PROVINCES)

FOR PRODUCT INFO: http://www.burndy.com

HYLUG™ (ONE HOLE CODE)

ITEM NO:	NA
CAT. NO:	YAZ6C-TC- (TABLE)
DRAWN BY:	D.BOISVERT 02/03/2000
CHECKER:	R.BOISVERT 01/10/2001
DSN APPVL:	J.MICHAUD 05/04/2000
MFG APPVL:	N/A --
QA APPVL:	S.BROWN --
MKT APPVL:	R.ROBICHEAU 02/01/2000
PROD FAM:	--
PROJECT #:	--
DOCUMENT TYPE:	Sales
REL LEVEL:	Released
SIZE	D
DRAWING NO	SE212356
REV	E
SCALE:	NTS
SHEET	5 OF 40

BURNDY

REV: PE0200