Rittal – The System.

Faster – better – everywhere.

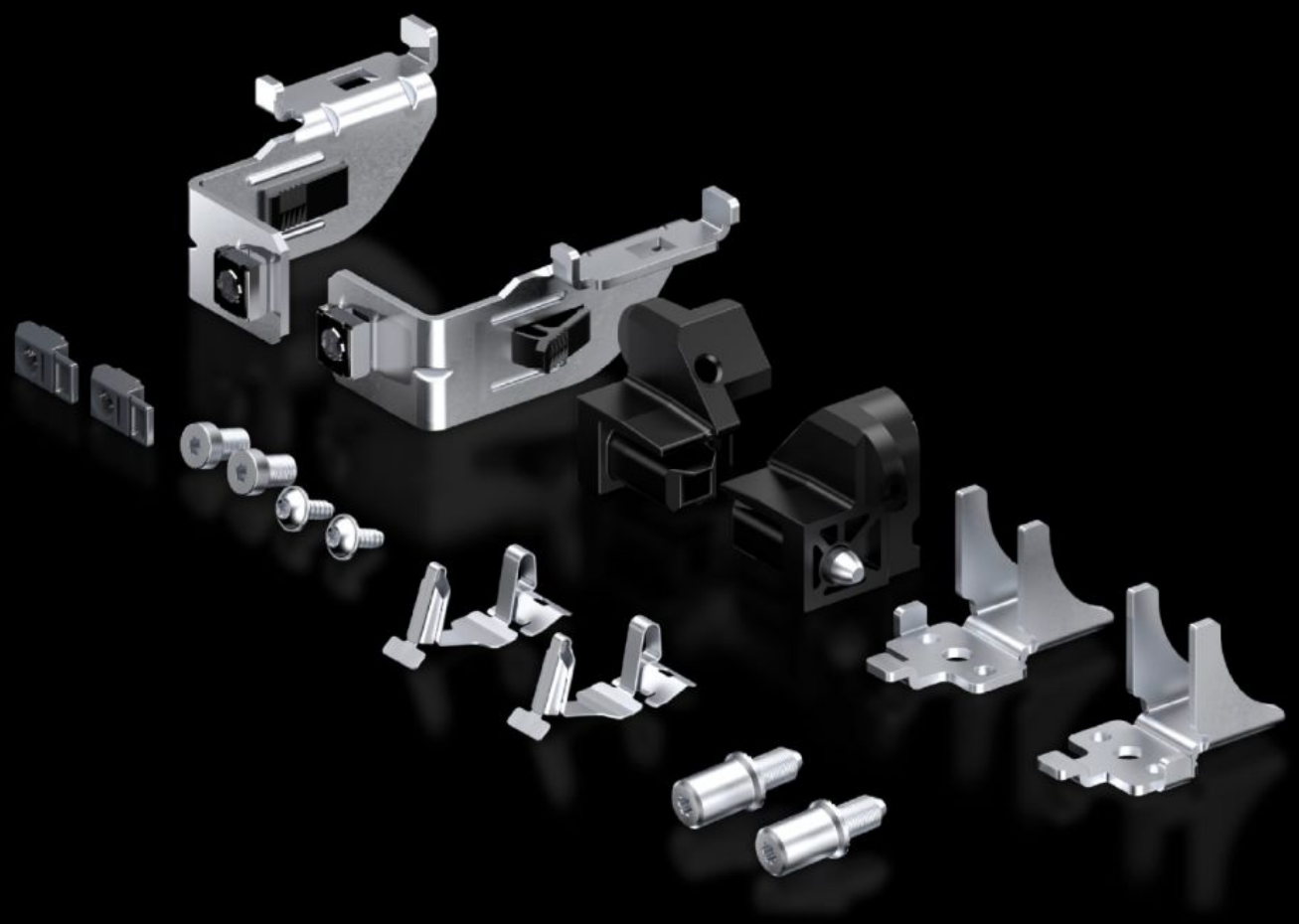

TS 5050.063

Mounting plate attachment

State: 9/22/2025 (Source: rittal.com/us-en)

TS 5050.063 - Mounting plate attachment for TS

Features

Model No.	TS 5050.063
Packaging unit	1 pc(s).
Net weight	0.57
Gross weight	0.58
Customs tariff number	83024200
EAN	4028177701632
ETIM 9	EC000213
ETIM 8	EC000213
ECLASS 8.0	27409216