File 0140

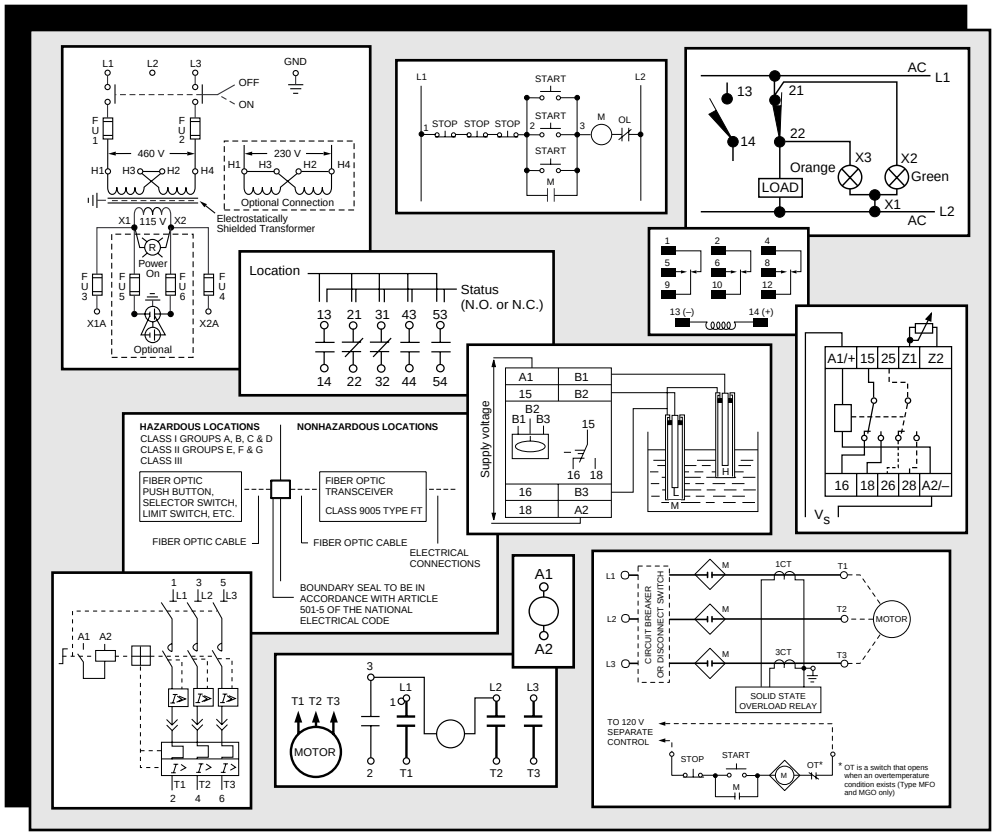

Wiring Diagram Book

SQUARE D
GROUPE SCHNEIDER

TRADEMARKS

QWIK-STOP® and ALHPA-PAK® are registered trademarks of Square D.

NEC® is a registered trademark of the National Fire Protection Association.

COPYRIGHT NOTICE

© 1993 Square D. All rights reserved. This document may not be copied in whole or in part, or transferred to any other media, without the written permission of Square D.

PLEASE NOTE:

Electrical equipment should be serviced only by qualified electrical maintenance personnel, and this document should not be viewed as sufficient instruction for those who are not otherwise qualified to operate, service or maintain the equipment discussed. Although reasonable care has been taken to provide accurate and authoritative information in this document, no responsibility is assumed by Square D for any consequences arising out of the use of this material.

Standard Elementary Diagram Symbols 1-3

NEMA and IEC Markings and Schematic Diagrams 4
Control and Power Connection Table 4

Terminology 5

Examples of Control Circuits 6
2-Wire Control 6
3-Wire Control 6-9
Shunting Thermal Units During Starting Period 10
Overcurrent Protection for 3-Wire Control Circuits 11

AC Manual Starters and Manual Motor Starting Switches 12
Class 2510 12
Class 2511 and 2512 13

2-Speed AC Manual Starters and IEC Motor Protectors..... 14
Class 2512 and 2520 14
GV1/GV3 14

Drum Switches..... 15
Class 2601 15

DC Starters, Constant and Adjustable Speed..... 16
Class 7135 and 7136 16

Reversing DC Starters, Constant and Adjustable Speed 17
Class 7145 and 7146 17

Mechanically Latched Contactors 18
Class 8196 18

Medium Voltage Motor Controllers..... 18-25
Class 8198 18-25

Solid State Protective Relays..... 26-27
Class 8430 26-27

General Purpose Relays 28
Class 8501 28

NEMA Control Relays..... 29
Class 8501 and 9999 29

General Purpose Relays 30
Class 8501 30

Sensing Relays..... 30
RM2 LA1/LG1 30

IEC Relays..... 31-32
IEC D-Line Control Relays 31
Class 8501 32

Type P Contactors..... 33-35
Class 8502 33-35
Class 8702 35

Type T Overload Relays..... 33-35
Class 9065 33-35

Type S AC Magnetic Contactors..... 36-40
Class 8502 36-40

IEC Contactors 41-42
IEC Contactors and Auxiliary Contact Blocks 41
Input Modules and Reversing Contactors 42

Type S AC Magnetic Starters 43-50
Class 8536 43-50
8538 and 8539 45,49
1-Phase, Size 00 to 3 43
2-Phase and 3-Phase, Size 00 to 5 44
3-Phase, Size 6 45
3-Phase, Size 7 46
3-Phase Additions and Special Features 47-50

Integral Self-Protected Starters 51-57
Integral 18 State of Auxiliary Contacts 51-52
Integral 32 and 63 State of Auxiliary Contacts 53-54
Wiring Diagrams 55-57

Type S AC Combination Magnetic Starters 58-59
Class 8538 and 8539 58-59
3-Phase, Size 0-5 58
3-Phase Additions and Special Features 59

Reduced Voltage Controllers 60-66
Class 8606 Autotransformer Type 60-61
Class 8630 Wye-Delta Type 62-63
Class 8640 2-Step Part-Winding Type 64
Class 8647 Primary-Resistor Type 65
Class 8650 and 8651 Wound-Rotor Type 66

Solid State Reduced Voltage Starters 67
Class 8660 ALPHA PAK®, Type MD-MG 67

Solid State Reduced Voltage Controllers 68-70
Class 8660 Type MH, MJ, MK and MM 68-70

Type S AC Reversing Magnetic Starters71-72
Class 873671-72
2- and 3-Pole71
3- and 4-Pole72

Type S AC 2-Speed Magnetic Starters73-76
Class 881073-76
Special Control Circuits75-76

Multispeed Motor Connections76-77
1- Phase76
3-Phase76-77

Programmable Lighting Controllers78
Class 886578

AC Lighting Contactors79-81
Class 890379-81
Load Connections79
Control Circuit Connections80
Panelboard Type Wiring81

Electronic Motor Brakes81-82
Class 8922 QWIK-STOP®81-82

Duplex Motor Controllers82
Class 894182

Fiber Optic Transceivers82
Class 900582

Photoelectric and Inductive Proximity Switches83
Class 900683

Photoelectric and Proximity Sensors84-89
XS, XSC, XSF and XSD84
XS and XTA85
SG, ST and XUB86
XUM, XUH, XUG, XUL and XUJ87
XUE, XUR, XUD, XUG and XUE S88
XUV89

Limit Switches and Safety Interlocks90-92
Class 900791
XCK and MS92

Pressure Switches and Transducers93
Class 9012, 9013, 9022 and 902593

Level Sensors and Electric Alternators94
Class 9034 and 903994

Pneumatic Timing Relays and Solid State Industrial Timing Relays95-96
Class 905095-96

Timers97
Class 905097

Transformer Disconnects98
Class 907098

Enclosure Selection Guide99

Conductor Ampacity and Conduit Tables100-101

Wire Data102

Electrical Formulas103-104

List of Tables

Table 1 Standard Elementary Diagram Symbols 1
Table 2 NEMA and IEC Terminal Markings 4
Table 3 NEMA and IEC Controller Markings and Elementary Diagrams 4
Table 4 Control and Power Connections for Across-the-Line Starters, 600 V or less4
Table 5 Motor Lead Connections 64
Table 6 Enclosures for Non-Hazardous Locations 99
Table 7 Enclosures for Hazardous Locations 99
Table 8 Conductor Ampacity100
Table 9 Ampacity Correction Factors 101
Table 10 Adjustment Factors 101
Table 11 Ratings for 120/240 V, 3-Wire, Single-Phase Dwelling Services101
Table 12 AWG and Metric Wire Data 102
Table 13 Electrical Formulas for Amperes, Horsepower, Kilowatts and KVA 103
Table 14 Ratings for 3-Phase, Single-Speed, Full-Voltage Magnetic Controllers for Nonplugglng and Nonjogging Duty 103
Table 15 Ratings for 3-Phase, Single-Speed, Full-Voltage Magnetic Controllers for Plug-Stop, Plug-Reverse or Jogging Duty 104
Table 16 Power Conversions 104

We Respond.®

The diagram symbols in Table 1 are used by Square D and, where applicable, conform to NEMA (National Electrical Manufacturers Association) standards.

Table 1 Standard Elementary Diagram Symbols

SWITCHES

Disconnect | Circuit Interrupter | Circuit Breakers w/ Thermal OL | Circuit Breakers w/ Magnetic OL

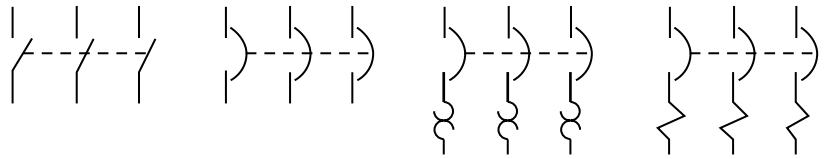

Pressure & Vacuum Switches — N.O. N.C.

Liquid Level Switches — N.O. N.C.

Temperature Actuated Switches — N.O. N.C.

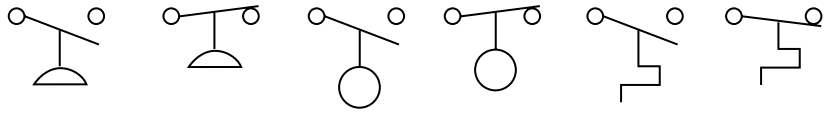

Limit Switches — N.O. N.C.

Held Closed | Held Open

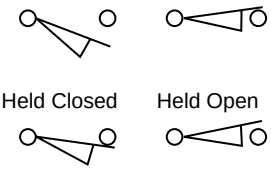

Speed (Plugging) — F, R

Anti-Plug — F, R

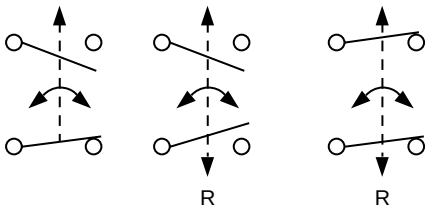

Flow Switches — N.O. N.C.

Foot Switches — N.O. N.C.

SELECTORS

2-Position Selector Switch

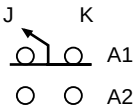

	J	K
A1	I	
A2		I

3-Position Selector Switch

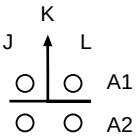

	J	K	L
A1	I		
A2			I

2-Position Selector Push Button

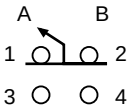

Selector Position	Push Button	Contacts 1-2	Contacts 3-4
A	Free	I	
	Depressed		I
B	Free		I
	Depressed		I

I = contact closed

PUSH BUTTONS – MOMENTARY CONTACT

N.O. | N.C. | N.O. & N.C. (double circuit) | Mushroom Head | Wobble Stick | Illuminated

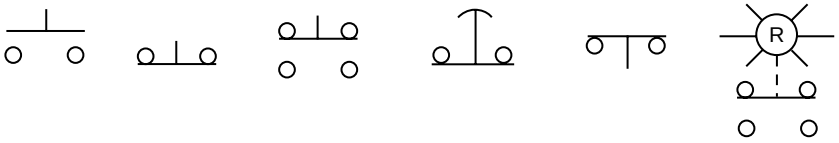

PUSH BUTTONS – MAINTAINED CONTACT

2 Single Circuits | 1 Double Circuit

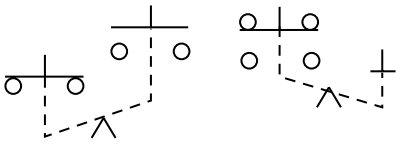

PILOT LIGHTS

Non Push-to-Test | Push-to-Test

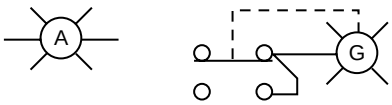

(indicate color by letter)

INSTANT OPERATING CONTACTS

w/ Blowout — N.O. N.C.

w/o Blowout — N.O. N.C.

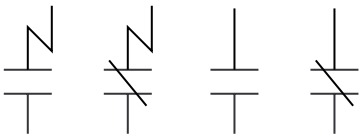

TIMED CONTACTS

Contact action retarded after coil is:

Energized — N.O.T.C. N.C.T.O.

Deenergized — N.O.T.O. N.C.T.C.

Table 1 Standard Elementary Diagram Symbols (cont'd)

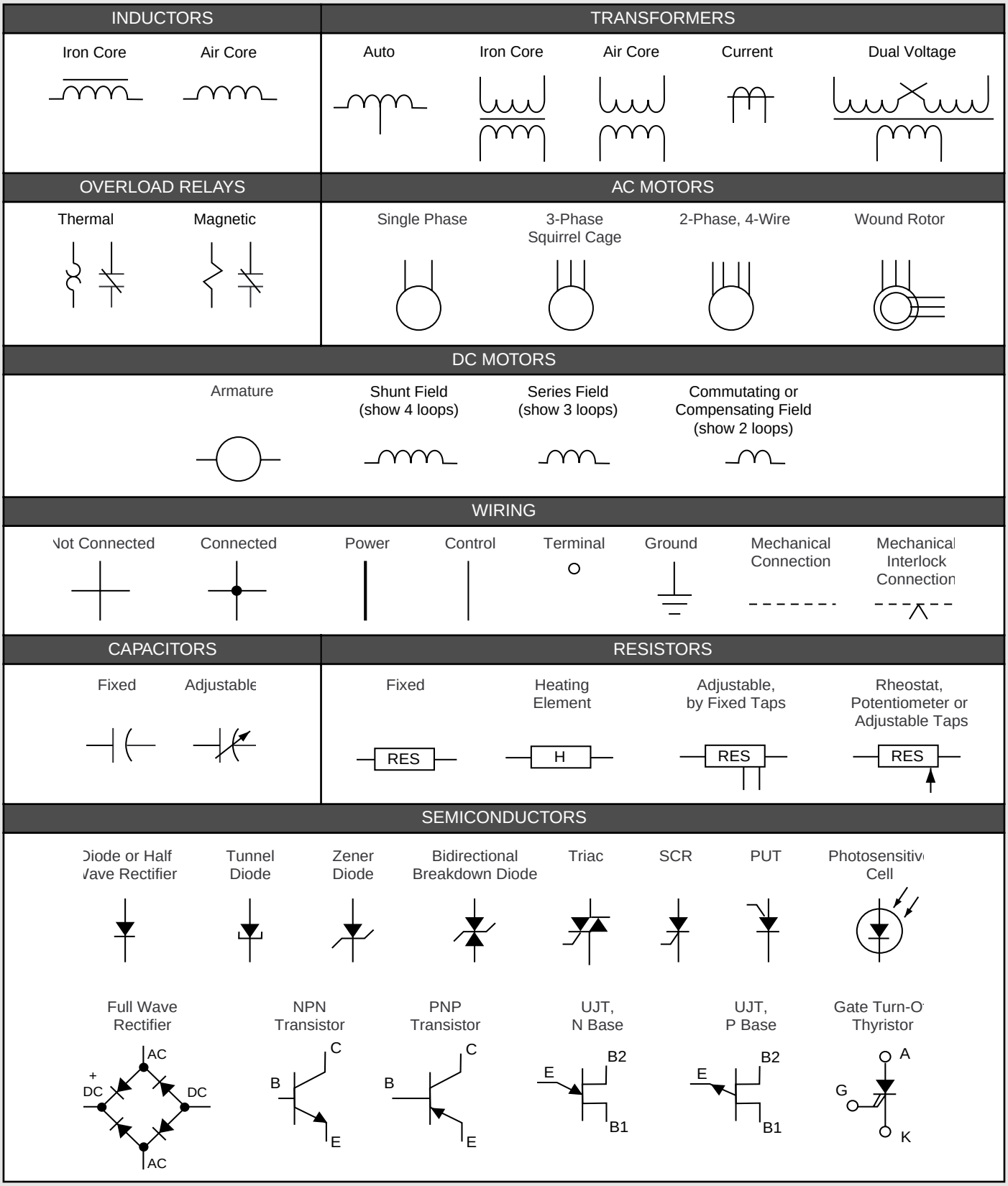

Table 1 Standard Elementary Diagram Symbols (cont'd)

OTHER COMPONENTS

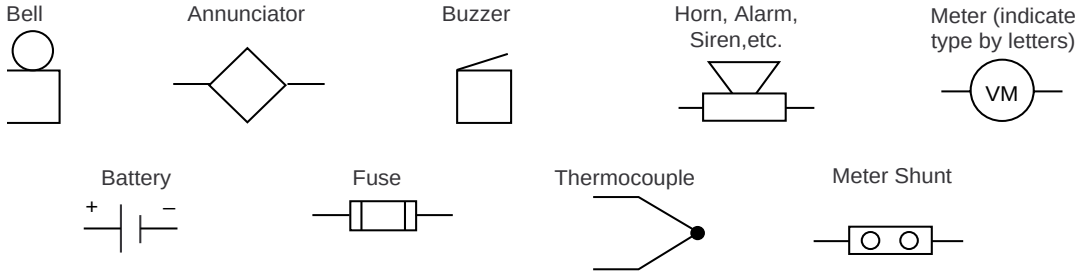

SUPPLEMENTARY CONTACT SYMBOLS

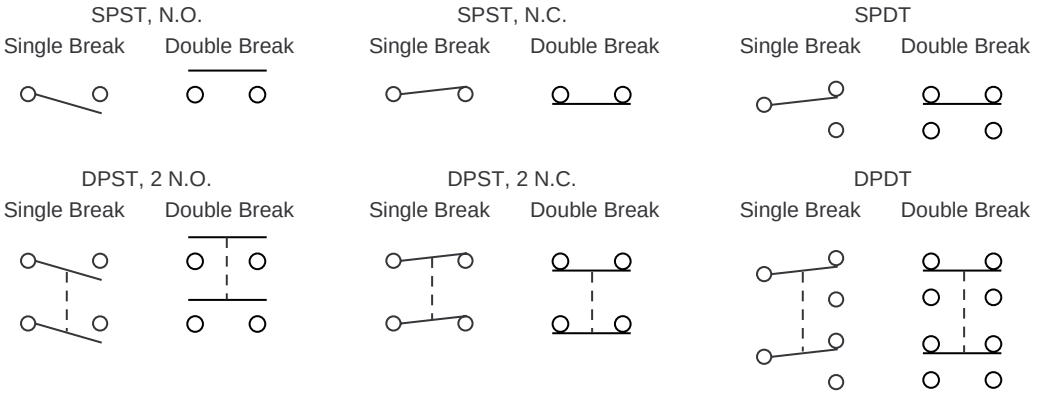

IEC SYMBOLS

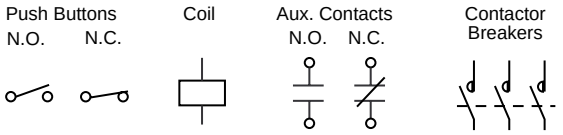

STATIC SWITCHING CONTROL

Limit Switch, N.O., Static Control

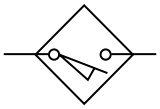

Static switching control is a method of switching electrical circuits without the use of contacts, primarily by solid state devices. To indicate static switching control, use the symbols shown in this table, enclosing them in a diamond as shown.

TERMS

SPST:	Single Pole, Single Throw	N.O.:	Normally Open	PUT:	Programmable Unijunction Transistor
SPDT:	Single Pole, Double Throw	N.C.:	Normally Closed	SCR:	Silicon Controlled Rectifier
DPST:	Double Pole, Single Throw	T.O.:	Timed Open	Triac:	Bidirectional Triode Thyristor
DPDT:	Double Pole, Double Throw	T.C.:	Timed Closed	UJT:	Unijunction Transistor

Table 2 NEMA and IEC Terminal Markings

NEMA

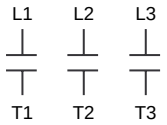

Alphanumeric, corresponding to incoming line and motor terminal designations

Power Terminals

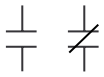

No specific marking

Control Terminals

No standard designation

Coil Terminals

IEC

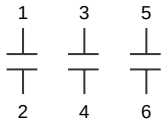

Single digit numeric, odd for supply lines, even for load connections

Power Terminals

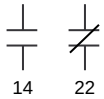

2-digit numeric, 1st designates sequence, 2nd designates function (1-2 for N.C., 3-4 for N.O.)

Control Terminals

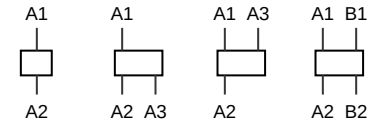

One Winding | Tapped Winding | Tapped Winding | Two Windings

Coil Terminals

Table 3 NEMA and IEC Controller Markings and Elementary Diagrams

NEMA

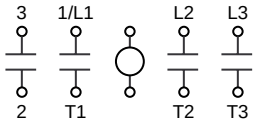

Typical Controller Markings

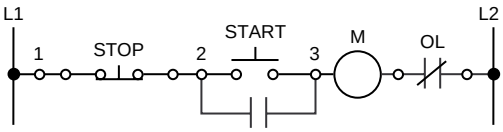

Typical Elementary Diagram

IEC

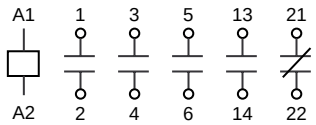

Typical Controller Markings

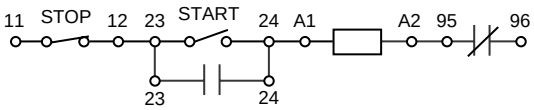

Typical Elementary Diagram

Table 4 Control and Power Connections for Across-the-Line Starters, 600 V or less (From NEMA standard ICS 2-321A.60)

		1-Phase	2-Phase, 4-Wire	3-Phase
Line Markings		L1, L2	L1, L3: Phase 1 L2, L4: Phase 2	L1, L2, L3
Ground, when used		L1 is always ungrounded	—	L2
Motor Running Overcurrent, units in:	1 element	L1	—	—
	2 element	—	L1, L4	—
	3 element	—	—	L1, L2, L3
Control Circuit Connected to		L1, L2	L1, L3	L1, L2
For Reversing, Interchange Lines		—	L1, L3	L1, L3

WIRING DIAGRAM

A wiring diagram shows, as closely as possible, the actual location of all component parts of the device. The open terminals (marked by an open circle) and arrows represent connections made by the user.

Since wiring connections and terminal markings are shown, this type of diagram is helpful when wiring the device or tracing wires when troubleshooting. Bold lines denote the power circuit and thin lines are used to show the control circuit. Black wires are conventionally used in power circuits and red wire in control circuits for AC magnetic equipment.

A wiring diagram is limited in its ability to completely convey the controller's sequence of operation. The elementary diagram is used where an illustration of the circuit in its simplest form is desired.

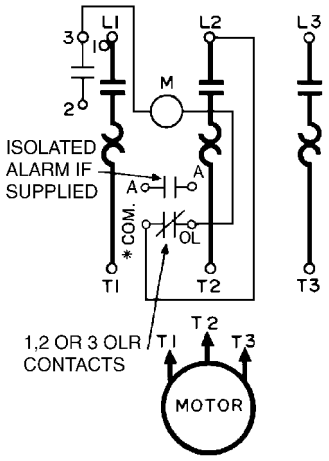

ELEMENTARY DIAGRAM

An elementary diagram is a simplified circuit illustration. Devices and components are not shown in their actual positions. All control circuit components are shown as directly as possible, between a pair of vertical lines representing the control power supply. Components are arranged to show the sequence of operation of the devices and how the device operates. The effect of operating various auxiliary contacts and control devices can be readily seen. This helps in troubleshooting, particularly with the more complex controllers.

This form of electrical diagram is sometimes referred to as a "schematic" or "line" diagram.

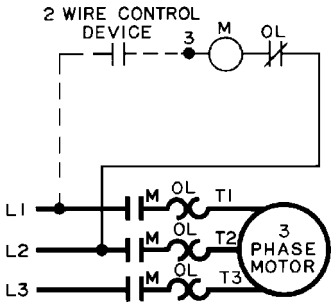

Low Voltage Release and Low Voltage Protection are the basic control circuits encountered in motor control applications. The simplest schemes are shown below. Other variations shown in this section may appear more complicated, but can always be resolved into these two basic schemes.

Note: The control circuits shown in this section may not include overcurrent protective devices required by applicable electrical codes. See page 11 for examples of control circuit overcurrent protective devices and their use.

Low Voltage Release: 2-Wire Control

FIG. 1

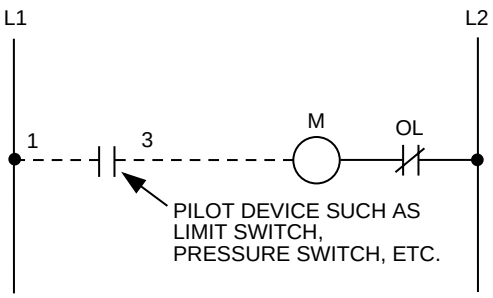

Low voltage release is a 2-wire control scheme using a maintained contact pilot device in series with the starter coil.

This scheme is used when a starter is required to function automatically without the attention of an operator. If a power failure occurs while the contacts of the pilot device are closed, the starter will drop out. When power is restored, the starter will automatically pickup through the closed contacts of the pilot device.

The term “2-wire” control is derived from the fact that in the basic circuit, only two wires are required to connect the pilot device to the starter.

Low Voltage Protection: 3-Wire Control

FIG. 2

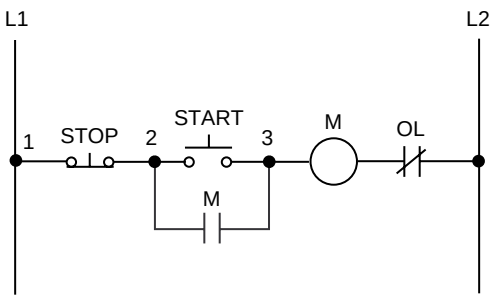

Low voltage protection is a 3-wire control scheme using momentary contact push buttons or similar pilot devices to energize the starter coil.

This scheme is designed to prevent the unexpected starting of motors, which could result in injury to machine operators or damage to the driven machinery. The starter is energized by pressing the Start button. An auxiliary holding circuit contact on the starter forms a parallel circuit around the Start button contacts, holding the starter in after the button is released. If a power failure occurs, the starter will drop out and will open the holding circuit contact. When power is restored, the Start button **must** be operated again before the motor will restart.

The term “3-wire” control is derived from the fact that in the basic circuit, at least three wires are required to connect the pilot devices to the starter.

2-Wire Control: Maintained Contact Hand-OFF-Auto Selector Switch

FIG. 3

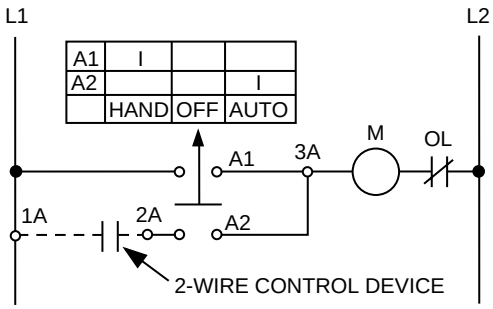

A Hand-Off-Auto selector switch is used on 2-wire control applications where it is desirable to operate the starter manually as well as automatically. The starter coil is manually energized when the switch is turned to the Hand position and is automatically energized by the pilot device when the switch is in the Auto position.

3-Wire Control: Momentary Contact Multiple Push Button Station

FIG. 4

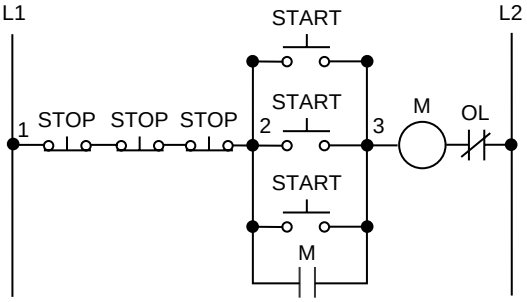

When a motor must be started and stopped from more than one location, any number of Start and Stop push buttons may be wired together. It is also possible to use only one Start-Stop station and have several Stop buttons at different locations to serve as an emergency stop.

3-Wire Control: Pilot Light Indicates when Motor is Running

FIG. 1

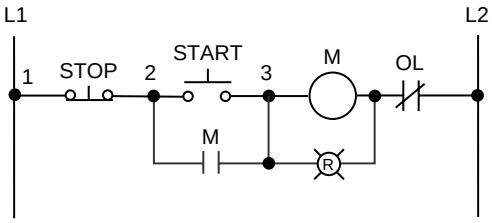

A pilot light can be wired in parallel with the starter coil to indicate when the starter is energized, indicating the motor is running.

3-Wire Control: Pilot Light Indicates when Motor is Stopped

FIG. 2

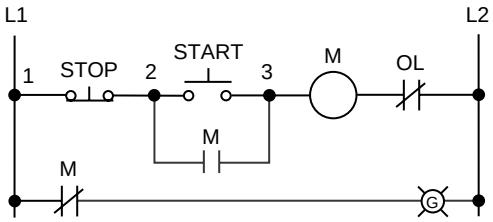

A pilot light may be required to indicate when the motor is stopped. This can be implemented by wiring a normally-closed auxiliary contact on the starter in series with the pilot light, as shown above. When the starter is deenergized, the pilot light illuminates. When the starter picks up, the auxiliary contact opens, turning off the light.

3-Wire Control: Push-to-Test Pilot Light Indicates when Motor is Running

FIG. 3

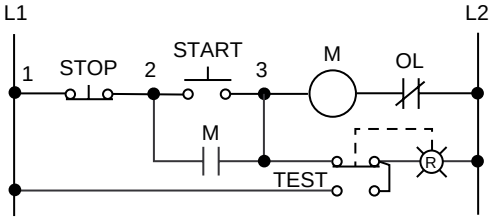

When the Motor Running pilot light is not lit, there may be doubt as to whether the circuit is open or whether the pilot light bulb is burned out. To test the bulb, push the color cap of the Push-to-Test pilot light.

3-Wire Control: Illuminated Push Button Indicates when Motor is Running

FIG. 4

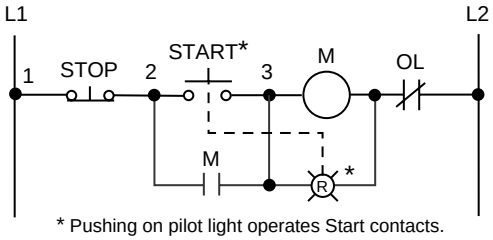

* Pushing on pilot light operates Start contacts.

The illuminated push button combines a Start button and pilot light in one unit. Pressing the pilot light lens operates the Start contacts. Space is saved by using a two-unit push button station instead of three.

3-Wire Control: Fused Control Circuit Transformer

FIG. 5

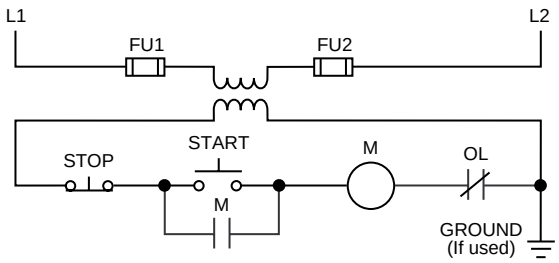

As an operator safety precaution, a step-down transformer can be used to provide a control circuit voltage lower than line voltage. The diagram above shows one way to provide overcurrent protection for control circuits.

3-Wire Control: Fused Control Circuit Transformer and Control Relay

FIG. 6

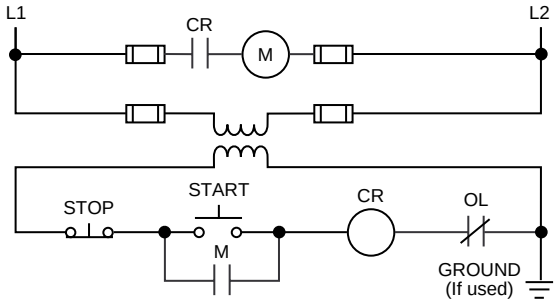

A starter coil with a high VA rating may require a control transformer of considerable size. A control relay and a transformer with a low VA rating can be connected so the normally-open relay contact controls the starter coil on the primary or line side. Square D Size 5 Combination Starter Form F4T starters use this scheme.

Jogging: Selector Switch and Start Push Button

FIG. 1

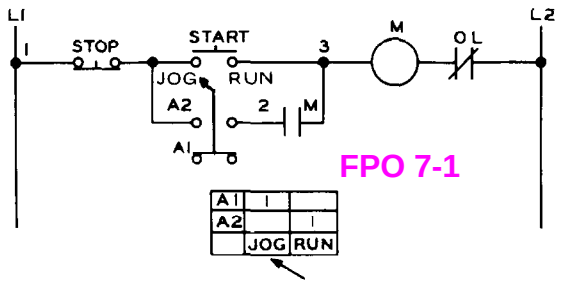

Jogging, or inching, is defined by NEMA as the momentary operation of a motor from rest for the purpose of accomplishing small movements of the driven machine. One method of jogging is shown above. The selector switch disconnects the holding circuit contact and jogging may be accomplished by pressing the Start push button.

Jogging: Selector Push Button

FIG. 2

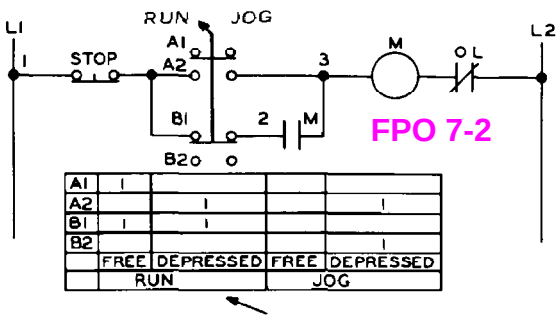

A selector push button may be used to obtain jogging, as shown above. In the Run position, the selector-push button provides normal 3-wire control. In the Jog position, the holding circuit is broken and jogging is accomplished by depressing the push button.

Jogging: Control Relay

FIG. 3

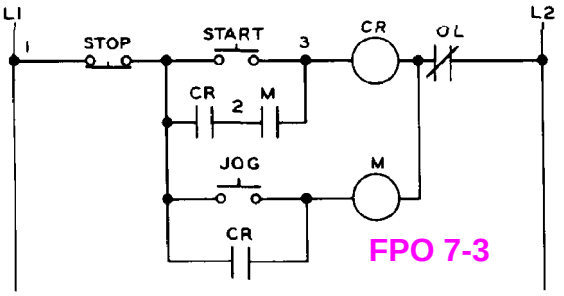

When the Start push button is pressed, the control relay is energized, which in turn energizes the starter coil. The normally-open starter auxiliary contact and relay contact then form a holding circuit around the Start push button. When the Jog push button is pressed, the starter coil is energized (independent of the relay) and no holding circuit forms, thus jogging can be obtained.

Jogging: Control Relay for Reversing Starter

FIG. 4

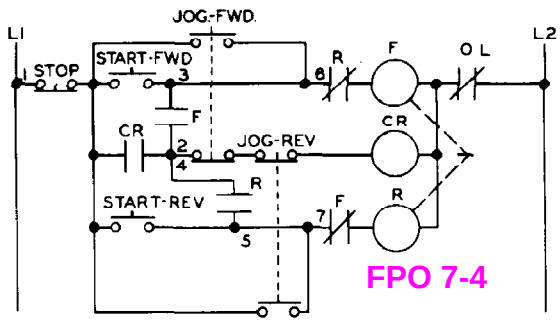

This control scheme permits jogging the motor either in the forward or reverse direction, whether the motor is at standstill or rotating. Pressing the Start-Forward or Start-Reverse push button energizes the corresponding starter coil, which closes the circuit to the control relay.The relay picks up and completes the holding circuit around the Start button. As long as the relay is energized, either the forward or reverse contactor remains energized. Pressing either Jog push button will deenergize the relay, releasing the closed contactor. Further pressing of the Jog button permits jogging in the desired direction.

3-Wire Control: More than 1 Starter, 1 Push Button Station Controls all

FIG. 5

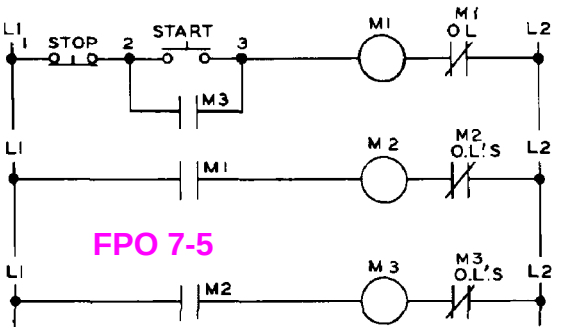

When one Start-Stop station is required to control more than one starter, the scheme above can be used. A maintained overload on any one of the motors will drop out all three starters.

3-Wire Control: Reversing Starter

FIG. 6

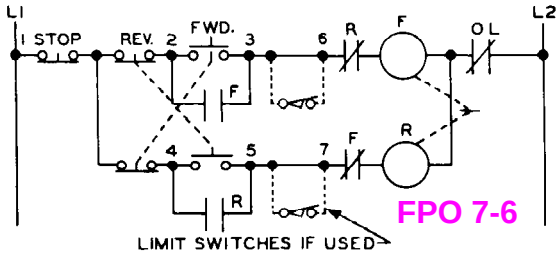

3-wire control of a reversing starter can be implemented with a Forward-Reverse-Stop push button station as shown above. Limit switches may be added to stop the motor at a certain point in either direction. Jumpers 6 to 3 and 7 to 5 must then be removed.

3-Wire Control: Reversing Starter Multiple Push Button Station

FIG. 1

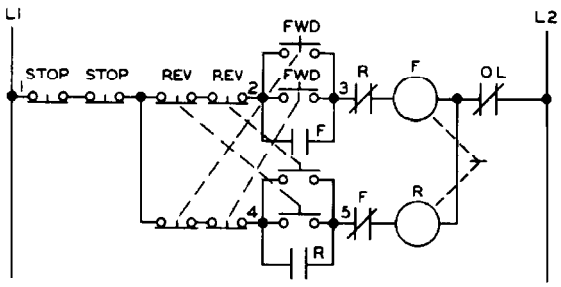

More than one Forward-Reverse-Stop push button station may be required and can be connected in the manner shown above.

3-Wire Control: Reversing Starter w/ Pilot Lights to Indicate Motor Direction

FIG. 2

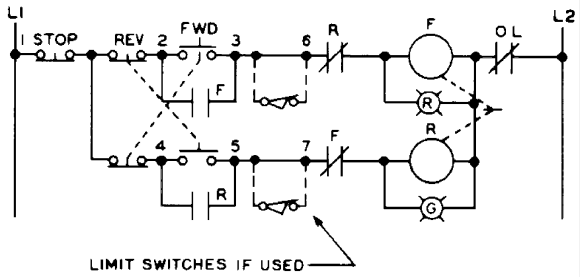

Pilot lights may be connected in parallel with the forward and reverse contactor coils, indicating which contactor is energized and thus which direction the motor is running.

3-Wire Control: 2-Speed Starter

FIG. 3

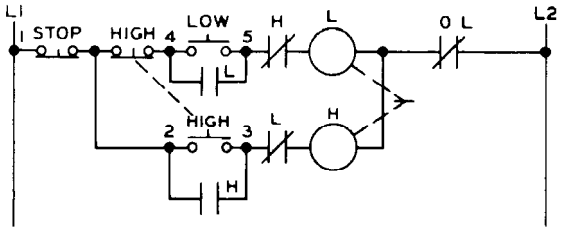

3-wire control of a 2-speed starter with a High-Low-Stop push button station is shown above. This scheme allows the operator to start the motor from rest at either speed or to change from low to high speed. The Stop button must be operated before it is possible to change from high to low speed. This arrangement is intended to prevent excessive line current and shock to motor and driven machinery, which results when motors running at high speed are reconnected for a lower speed.

3-Wire Control: 2-Speed Starter w/ 1 Pilot Light to Indicate Motor Operation at Each Speed

FIG. 4

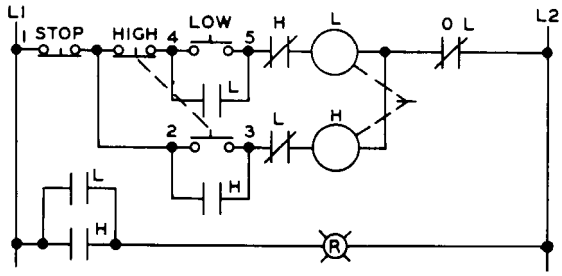

One pilot light may be used to indicate operation at both low and high speeds. One extra normally-open auxiliary contact on each contactor is required. Two pilot lights, one for each speed, may be used by connecting pilot lights in parallel with high and low coils (see reversing starter diagram above).

Plugging: Plugging a Motor to a Stop from 1 Direction Only

FIG. 5

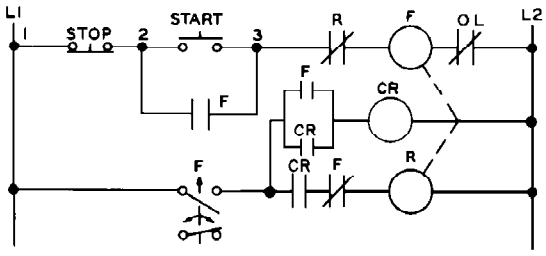

Plugging is defined by NEMA as a braking system in which the motor connections are reversed so the motor develops a counter torque, thus exerting a retarding force. In the above scheme, forward rotation of the motor closes the normally-open plugging switch contact and energizing control relay CR. When the Stop push button is operated, the forward contactor drops out, the reverse contactor is energized through the plugging switch, control relay contact and normally-closed forward auxiliary contact. This reverses the motor connections and the motor is braked to a stop. The plugging switch then opens and disconnects the reverse contactor. The control relay also drops out. The control relay makes it impossible for the motor to be plugged in reverse by rotating the motor rotor closing the plugging switch. This type of control is not used for running in reverse.

Anti-Plugging: Motor to be Reversed but Must Not be Plugged

FIG. 6

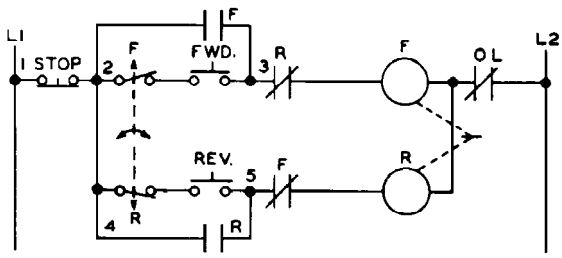

Anti-plugging protection is defined by NEMA as the effect of a device that operates to prevent application of counter-torque by the motor until the motor speed has been reduced to an acceptable value. In the scheme above, with the motor operating in one direction, a contact on the anti-plugging switch opens the control circuit of the contactor used for the opposite direction. This contact will not close until the motor has slowed down, after which the other contactor can be energized.

Shunting Thermal Units During Starting Period

Article 430-35 of the NEC describes circumstances under which it is acceptable to shunt thermal units during abnormally long accelerating periods.

430-35. Shunting During Starting Period.

(a) Nonautomatically Started. For a nonautomatically started motor, the overload protection shall be permitted to be shunted or cut out of the circuit during the starting period of the motor if the device by which the overload protection is shunted or cut out cannot be left in the starting position and if fuses or inverse time circuit breakers rated or set at not over 400 percent of the full-load current of the motor are so located in the circuit as to be operative during the starting period of the motor.

(b) Automatically Started. The motor overload protection shall not be shunted or cut out during the starting period if the motor is automatically started.

Exception. The motor overload protection shall be permitted to be shunted or cut out during the starting period on an automatically started motor where:

(1) The motor starting period exceeds the time delay of available motor overload protective devices, and

(2) Listed means are provided to:

a. Sense motor rotation and to automatically prevent the shunting or cut out in the event that the motor fails to start, and

b. Limit the time of overload protection shunting or cut out to less than the locked rotor time rating of the protected motor, and

c. Provide for shutdown and manual restart if motor running condition is not reached.

Figures 1 and 2 show possible circuits for use in conjunction with 3-wire control schemes. Figure 1 complies with NEC requirements. Figure 2 exceeds NEC requirements, but the additional safety provided by the zero speed switch might be desirable.
Figure 3 shows a circuit for use with a 2-wire, automatically started control scheme that complies with NEC requirements. UL or other listed devices must be used in this arrangement.

FIG. 1

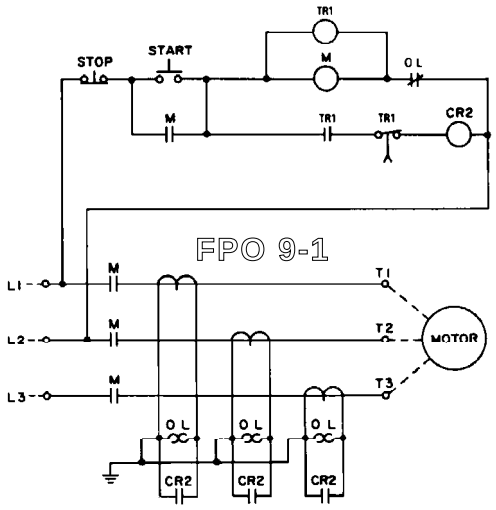

FIG. 2

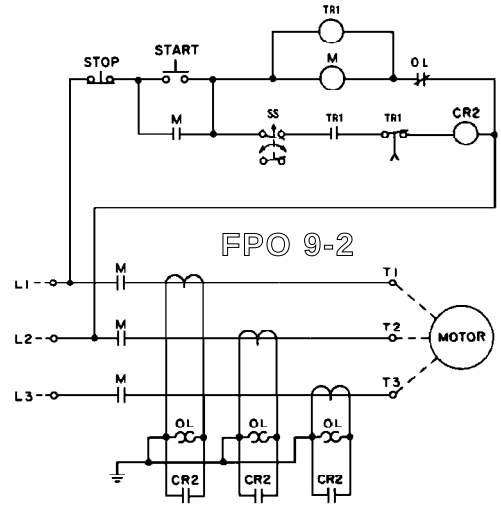

FIG. 3

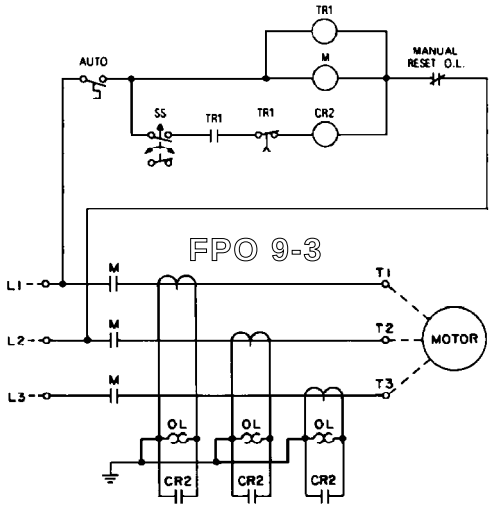

3-Wire Control: Fusing in 1 Line Only

FIG. 1

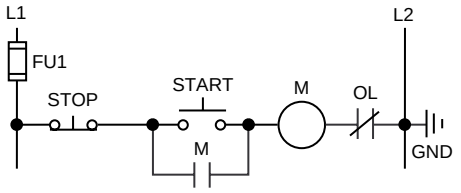

Common control with fusing in one line only and with both lines ungrounded or, if user's conditions permit, with one line grounded.

3-Wire Control: Fusing in Both Lines

FIG. 2

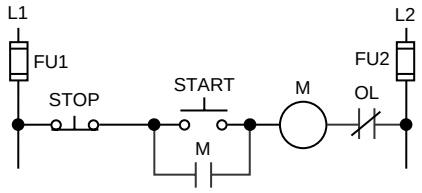

Common control with fusing in both lines and with both lines ungrounded.

3-Wire Control: Fusing in Both Primary Lines

FIG. 3

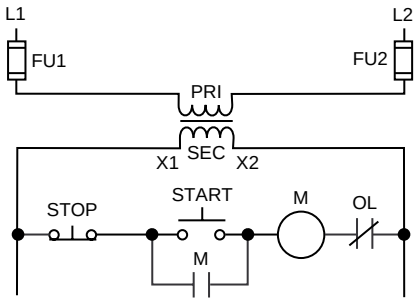

Control circuit transformer with fusing in both primary lines, no secondary fusing and all lines ungrounded.

3-Wire Control: Fusing in Both Primary and Secondary Lines

FIG. 4

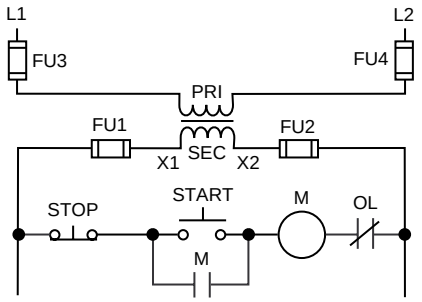

Control circuit transformer with fusing in both primary lines and both secondary lines, with all lines ungrounded.

3-Wire Control: Fusing in Both Primary Lines and 1 Secondary Line

FIG. 5

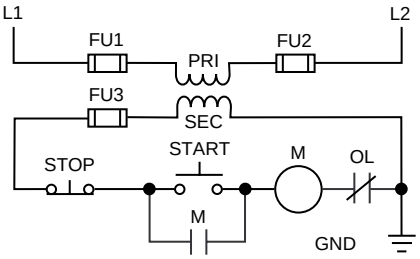

Control circuit transformer with fusing in one secondary line and both primary lines, with one line grounded.

3-Wire Control: Fusing in Both Primary and Secondary Lines For Large Starters using Small Transformer

FIG. 6

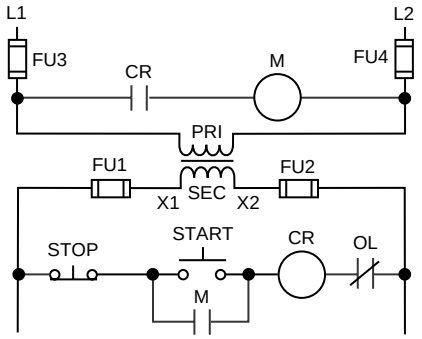

Control circuit transformer with fusing in both primary lines and both secondary lines, with all lines ungrounded. Used for large VA coils only.

Manual Motor Starting Switches: Class 2510 Type K

FIG. 1

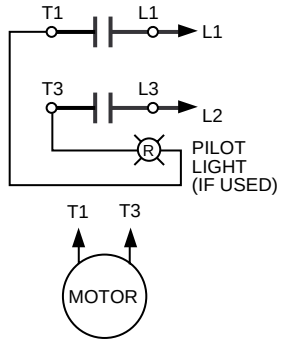

2-Pole, 1-Phase

FIG. 2

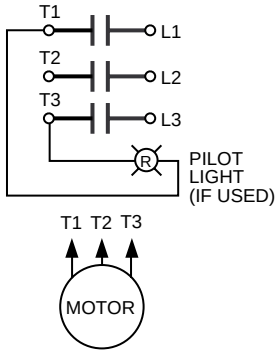

3-Pole, 3-Phase

Fractional Horsepower Manual Starters: Class 2510 Type F

FIG. 3

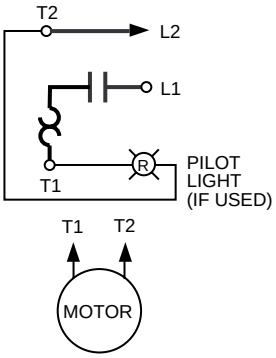

1-Pole

FIG. 4

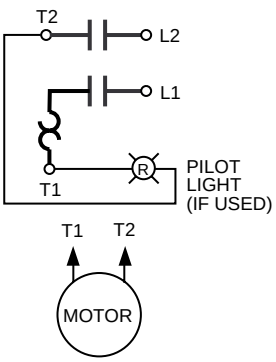

2-Pole

FIG. 5

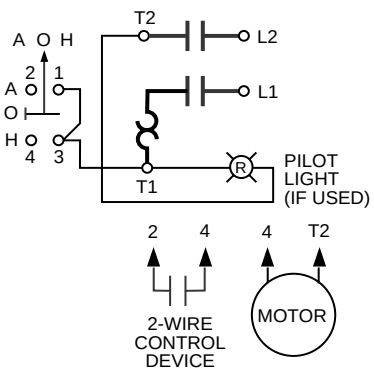

2-Pole w/ Selector Switch

Integral Horsepower Manual Starters: Class 2510 Size M0 and M1

FIG. 6

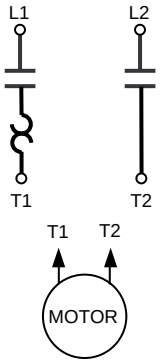

2-Pole, 1-Phase

FIG. 7

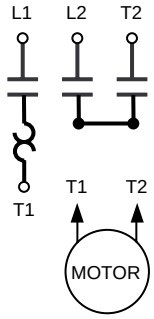

3-Pole, DC

FIG. 8

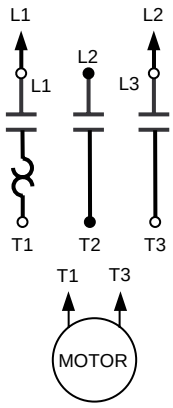

3-Pole, 1-Phase

FIG. 9

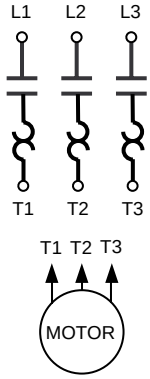

3-Pole, 3-Phase

FIG. 10

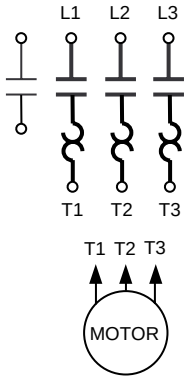

3-Pole, 3-Phase w/ additional Interlock (Form X)

We Respond.®

AC Reversing Manual Starters and Manual Motor Starting Switches: Class 2511

FIG. 1

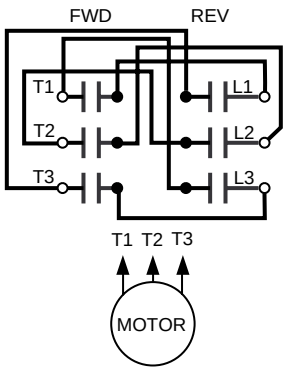

Reversing Manual Motor Starting Switch
Type K, 3-Pole, 3-Phase

FIG. 2

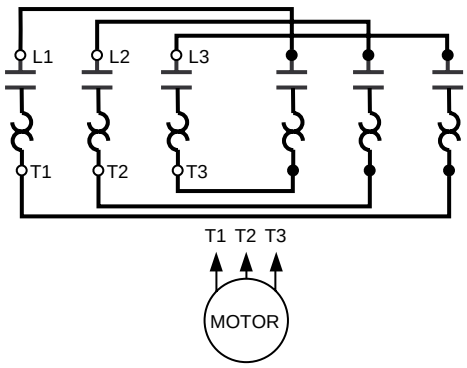

Reversing Manual Starter
Sizes M0 and M1, 3-Pole, 3-Phase

AC 2-Speed Manual Motor Starting Switches: Class 2512 Type K

FIG. 3

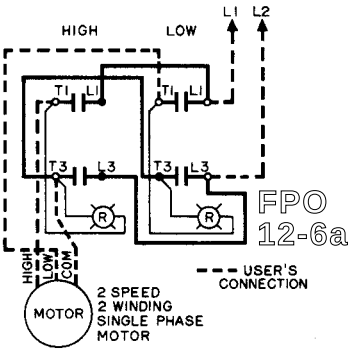

2-Pole, 1-Phase w/ Pilot Lights

FIG. 4

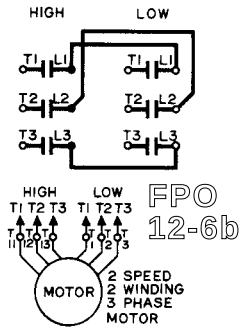

3-Pole, 3-Phase

AC 2-Speed Manual Motor Starters: Class 2512 Type F

FIG. 5

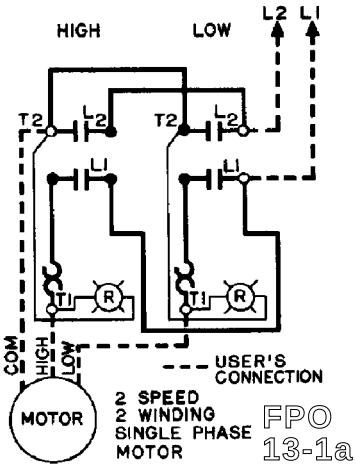

2-Unit, 2-Pole w/ Mechanical Interlock and Pilot Lights

FIG. 6

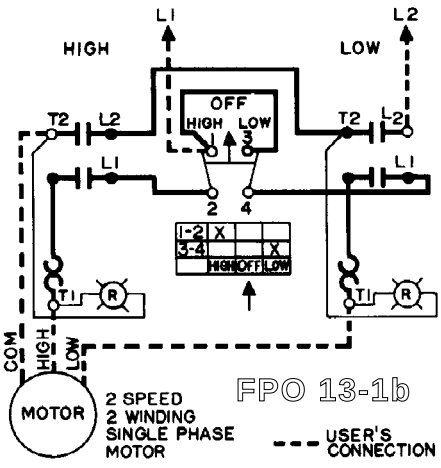

3-Unit, 2-Pole w/ Selector Switch and Pilot Lights

2-Speed AC Manual Motor Starters: Class 2512 Size M0 and M1

FIG. 1

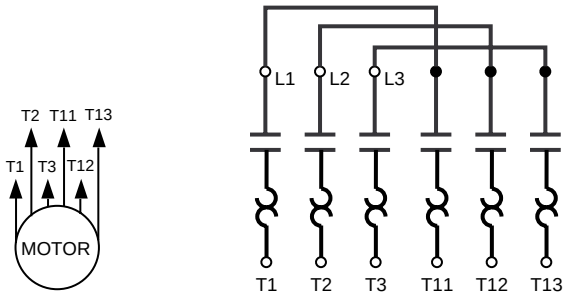

2-Speed Manual Starter for Wye-Connected, Separate Winding Motor

Motor Protective Switches: Class 2520

FIG. 2

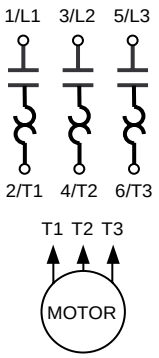

3-Pole, 3-Phase

FIG. 3

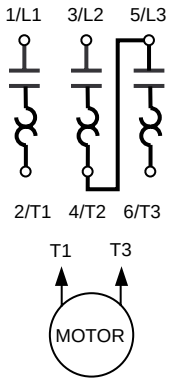

2-Pole Application

FIG. 4

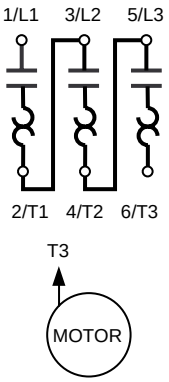

1-Pole Application

IEC Manual Starters: GV1/GV3

Telemecanique

FIG. 5

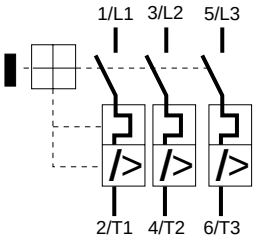

GV3 M• Motor Protector

FIG. 6

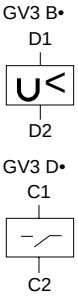

GV3 Voltage Trips

FIG. 7

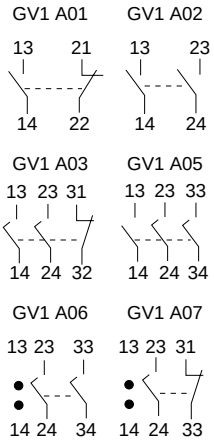

GV1 A0• Contact Block

FIG. 8

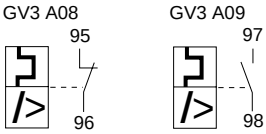

GV3 A0• Fault Signalling Contacts

We Respond.®

Drum Switches: Class 2601

FIG. 1

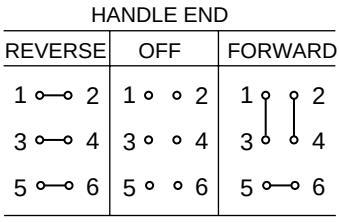

Internal Switching

FIG. 2

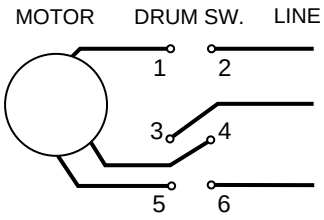

3-Phase, 3-Wire Motor

FIG. 3

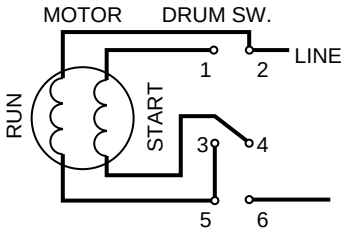

1-Phase, Capacitor or Split-Phase Motor

FIG. 4

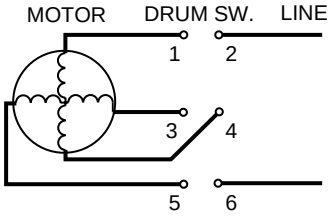

1-Phase, 4-Lead Repulsion Induction Motor

FIG. 5

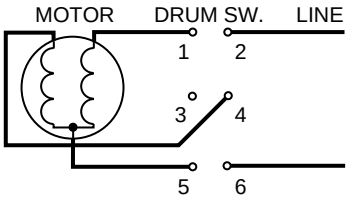

1-Phase, 3-Lead Repulsion Induction Motor

FIG. 6

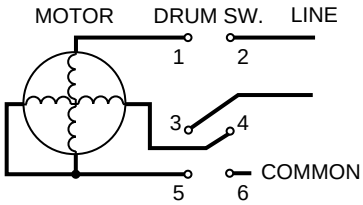

2-Phase, 3-Wire Motor

FIG. 7

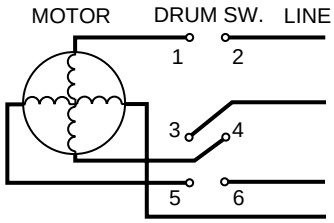

2-Phase, 4-Wire Motor

FIG. 8

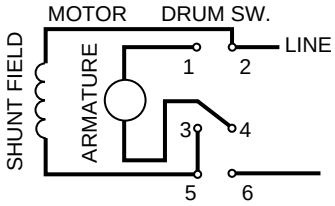

DC, Shunt Motor

FIG. 9

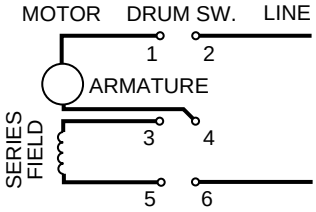

DC, Series Motor

FIG. 10

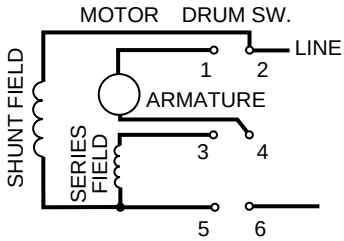

DC, Compound Motor

Constant Speed DC Starter: Class 7135

FIG. 1

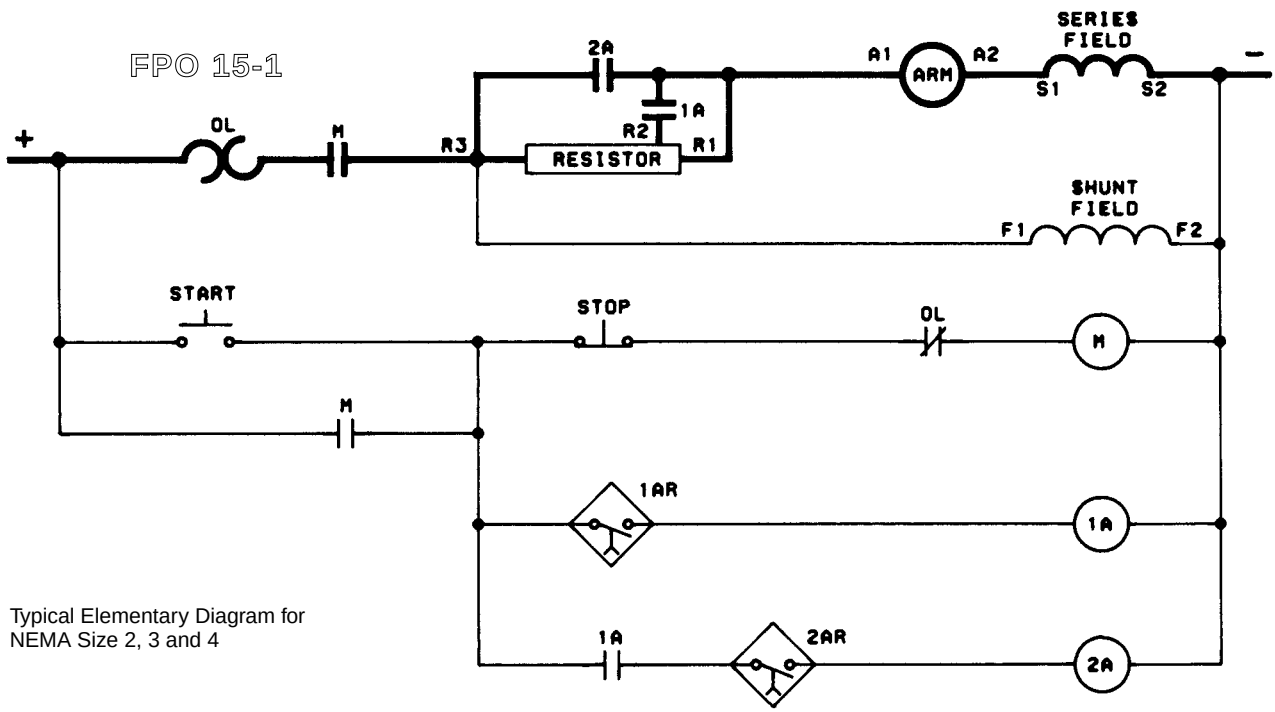

Typical Elementary Diagram for NEMA Size 2, 3 and 4

Adjustable Speed DC Starter: Class 7136

FIG. 2

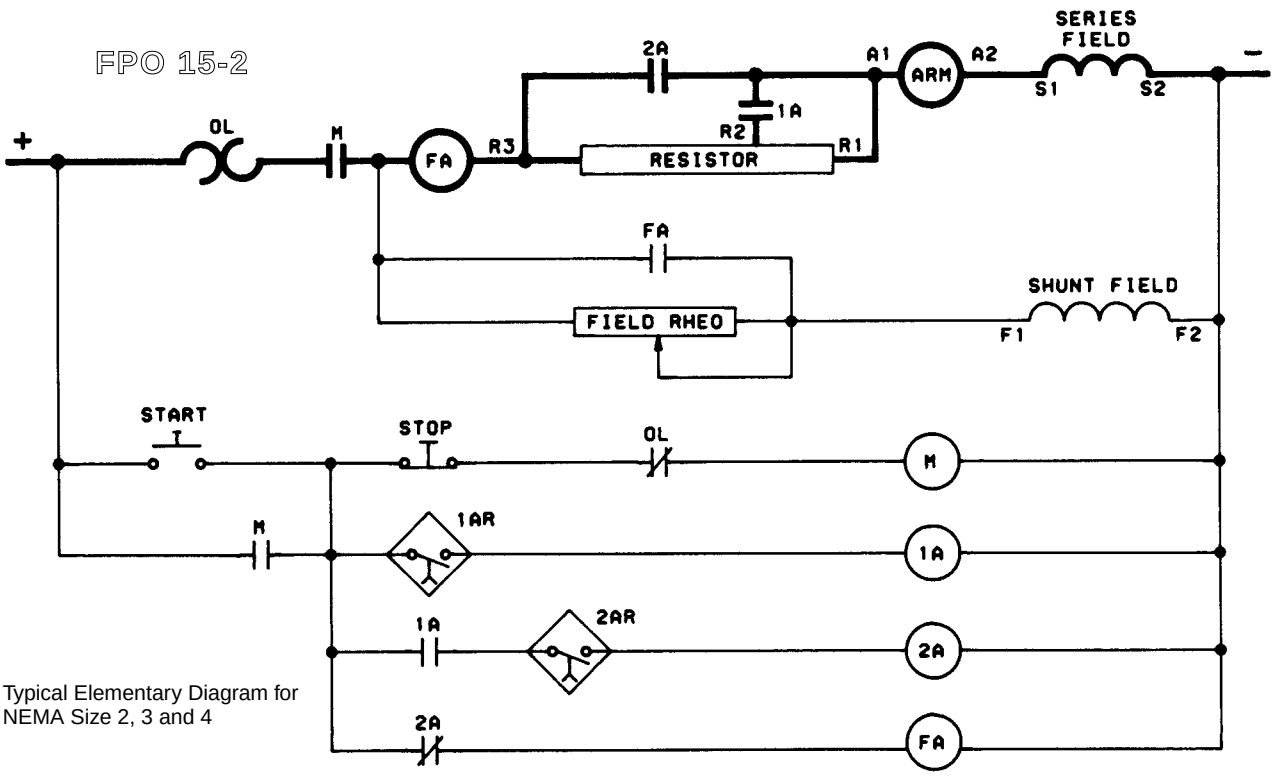

Typical Elementary Diagram for NEMA Size 2, 3 and 4

Acceleration Contactors: Class 7135, 7136, 7145 and 7146					
NEMA Size	1	2	3	4	5
No. of Acceleration Contactors	1	2	2	2	3

We Respond.®

Reversing Constant Speed DC Starter: Class 7145

FIG. 1

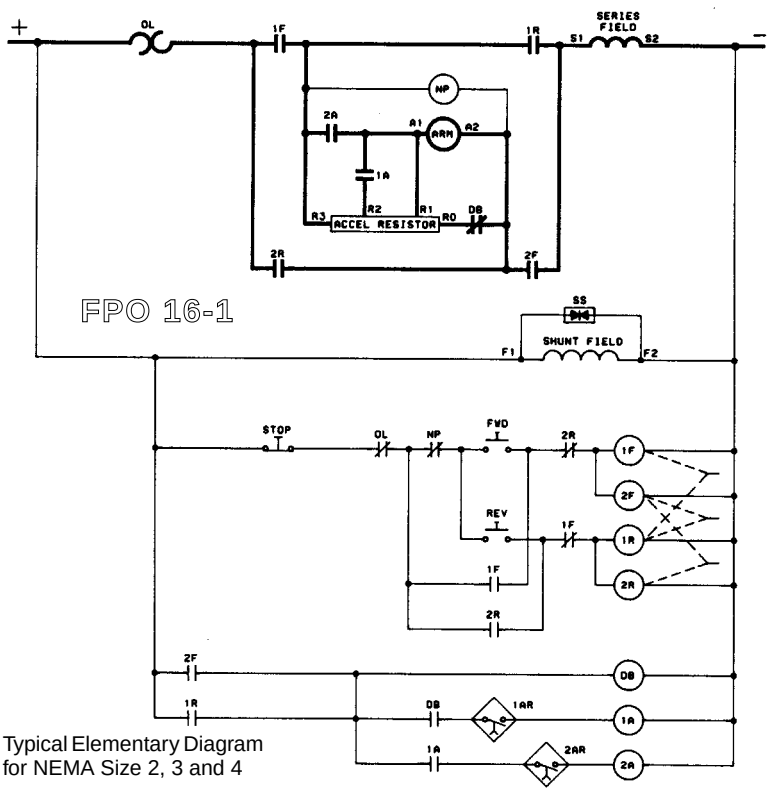

Typical Elementary Diagram
for NEMA Size 2, 3 and 4

Reversing Adjustable Speed DC Starter: Class 7146

FIG. 2

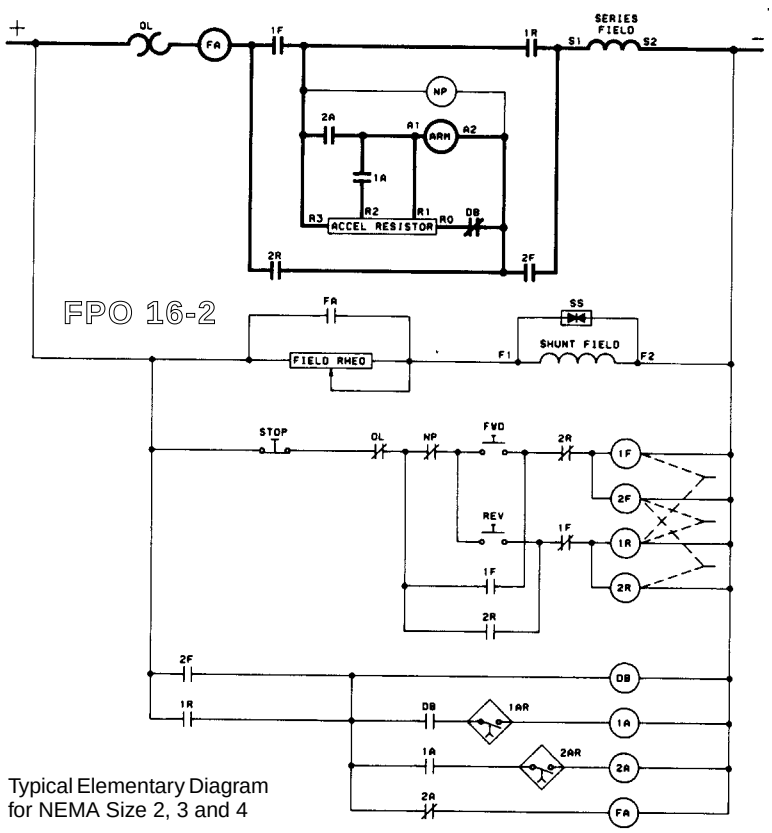

Typical Elementary Diagram
for NEMA Size 2, 3 and 4

Mechanically Latched Contactor:
Class 8196 Type FL13, FL23, FL12 and FL22

FIG. 1

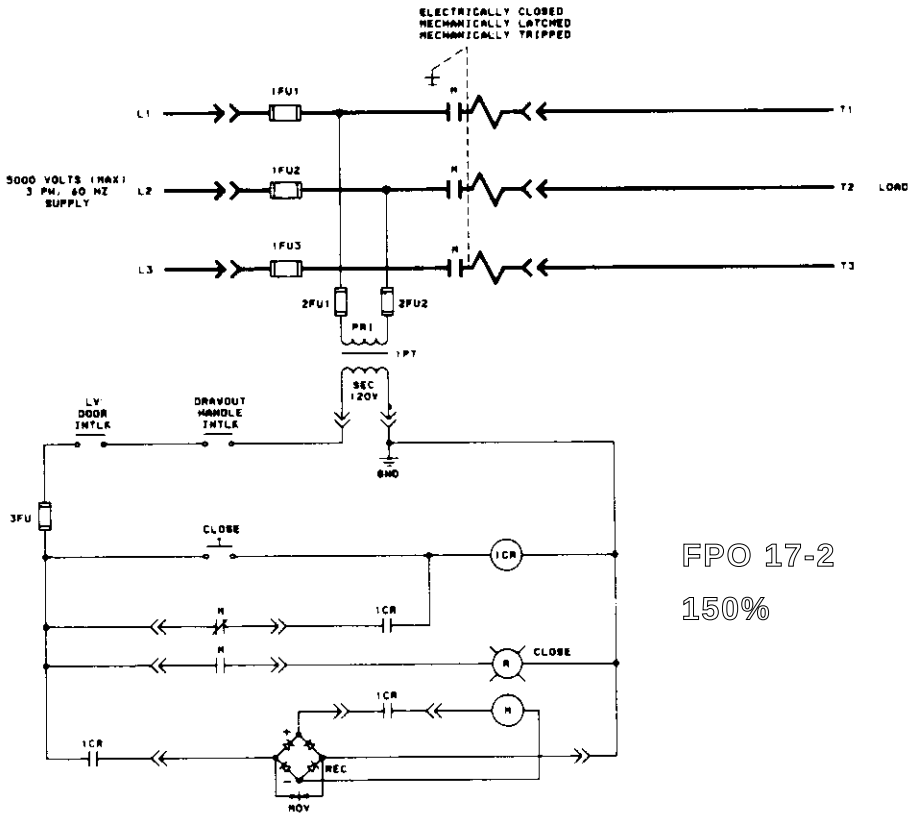

FPO 17-2

150%

Full-Voltage, Non-Reversing Squirrel Cage Motor Controller:
Class 8198 Type FC11, FC21, FC13, FC23, FC12 and FC22

FIG. 2

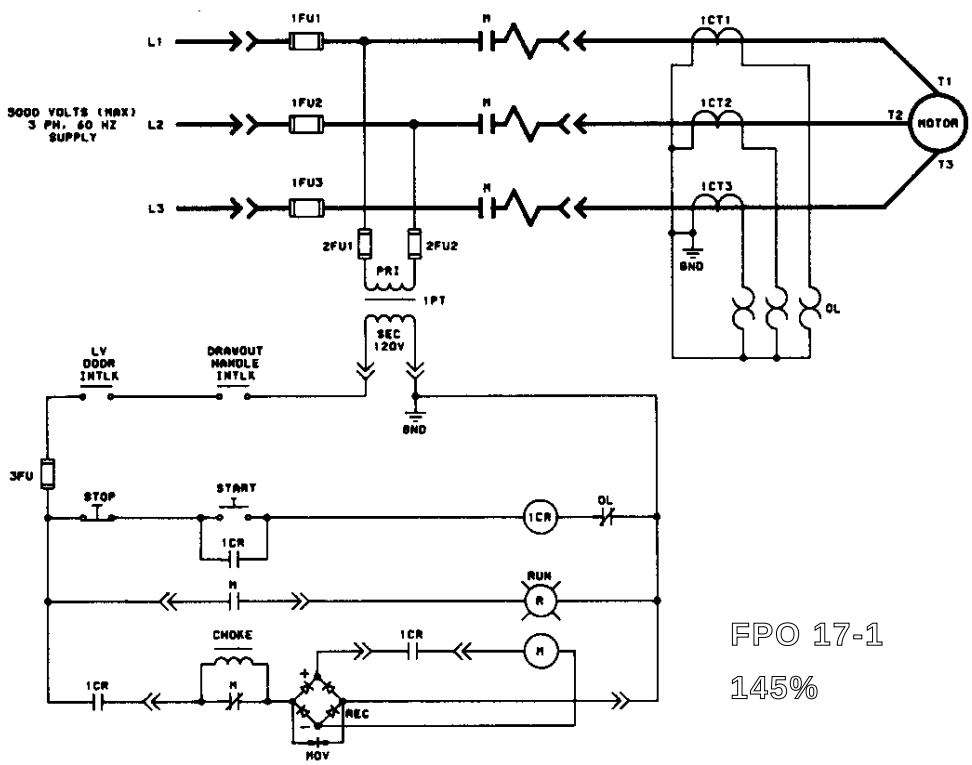

FPO 17-1

145%

We Respond.®

Full-Voltage Squirrel Cage Motor Controller:
Class 8198 Type FCR1 and FCR2

FIG. 1

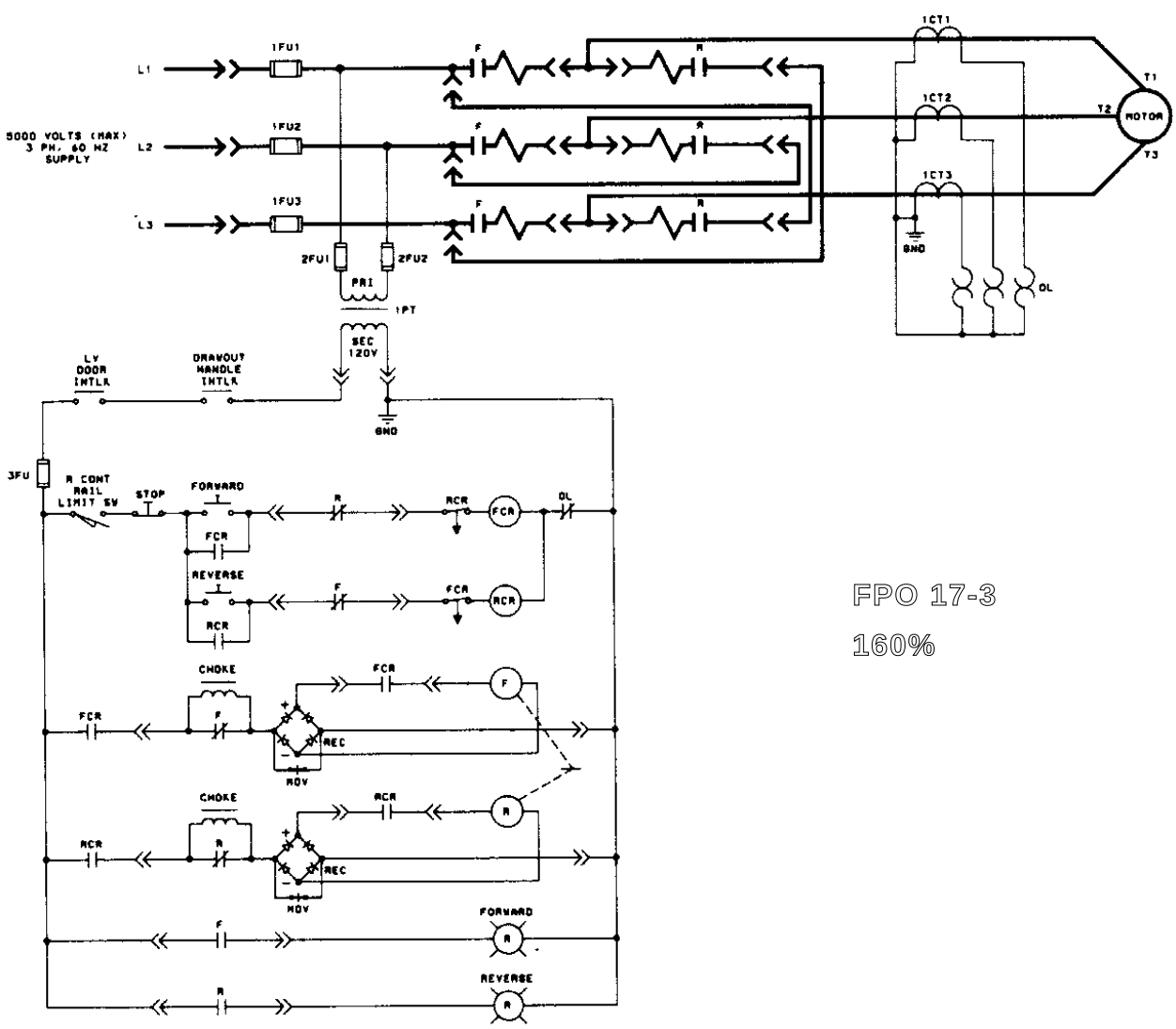

FPO 17-3

160%

Reduced-Voltage, Primary Reactor, Non-Reversing Squirrel Cage Motor Controller: Class 8198 Type RCR1 and RCR2

FIG. 1

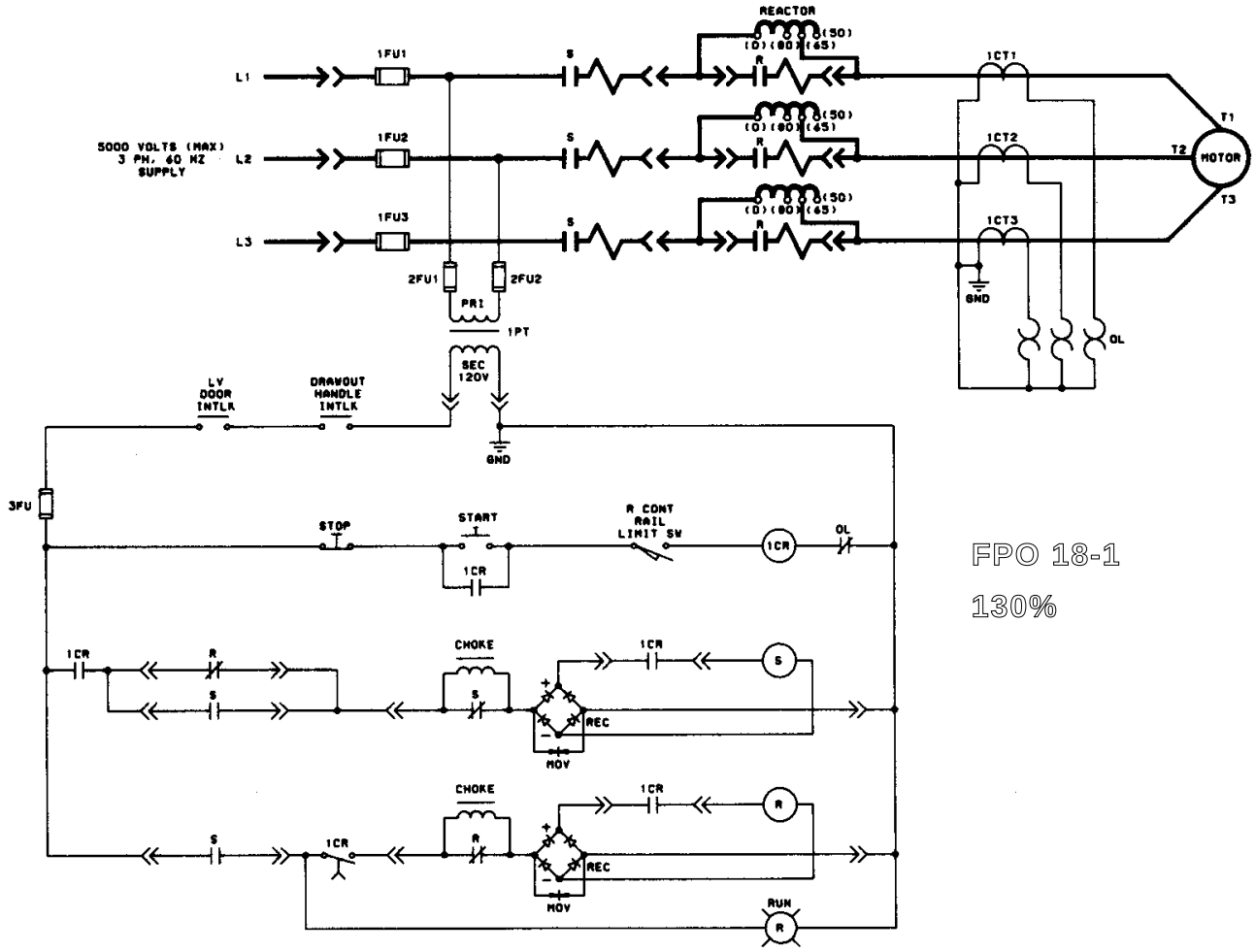

FPO 18-1

130%

We Respond.®

Reduced-Voltage, Primary Reactor, Autotransformer, Non-Reversing Squirrel Cage Motor Controller: Class 8198 Type RCA1 and RCA2

FIG. 1

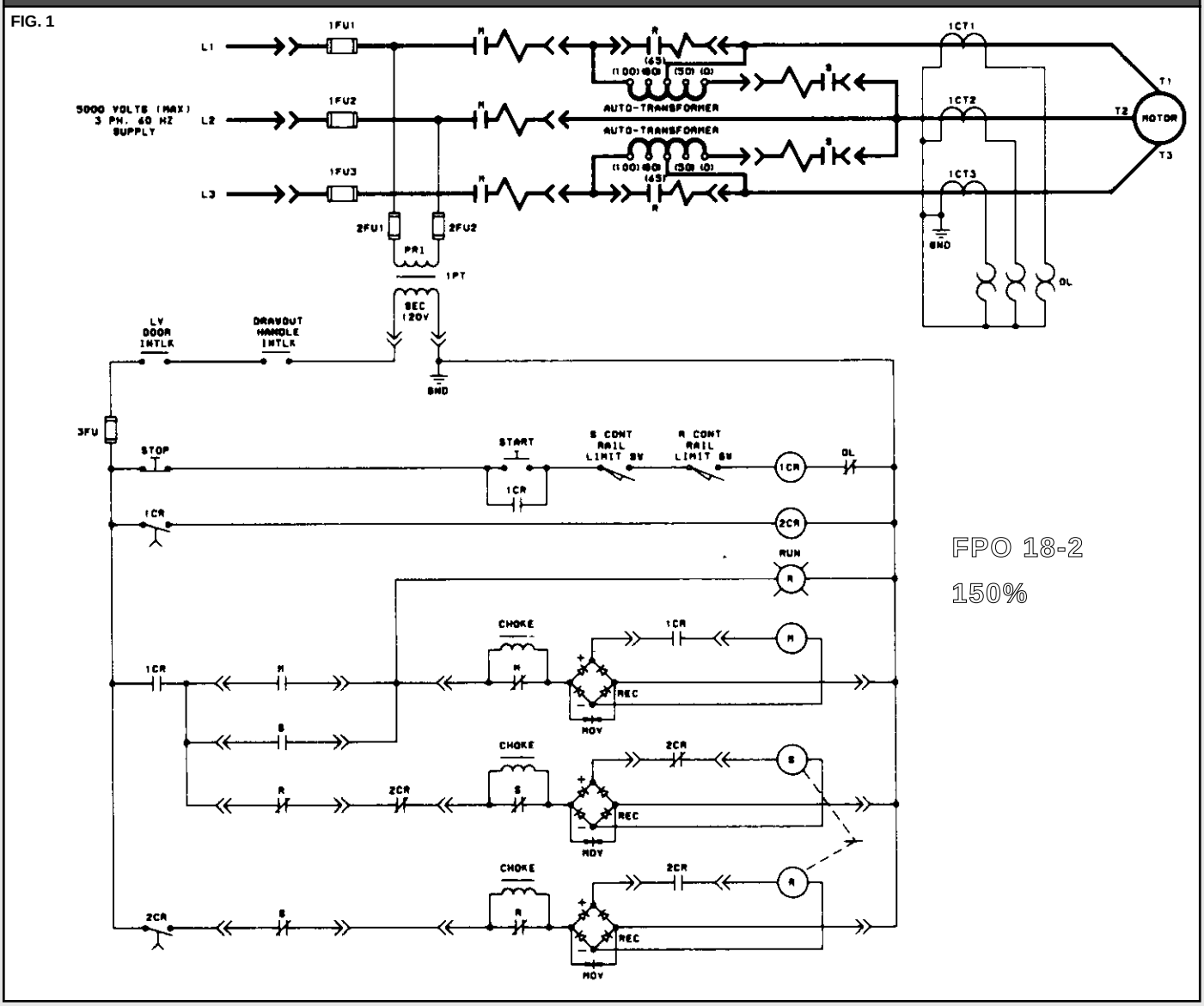

FPO 18-2

150%

Full Voltage, Non-Reversing Synchronous Motor Controller:
Class 8198 Type FS1 and FS2

FIG. 1

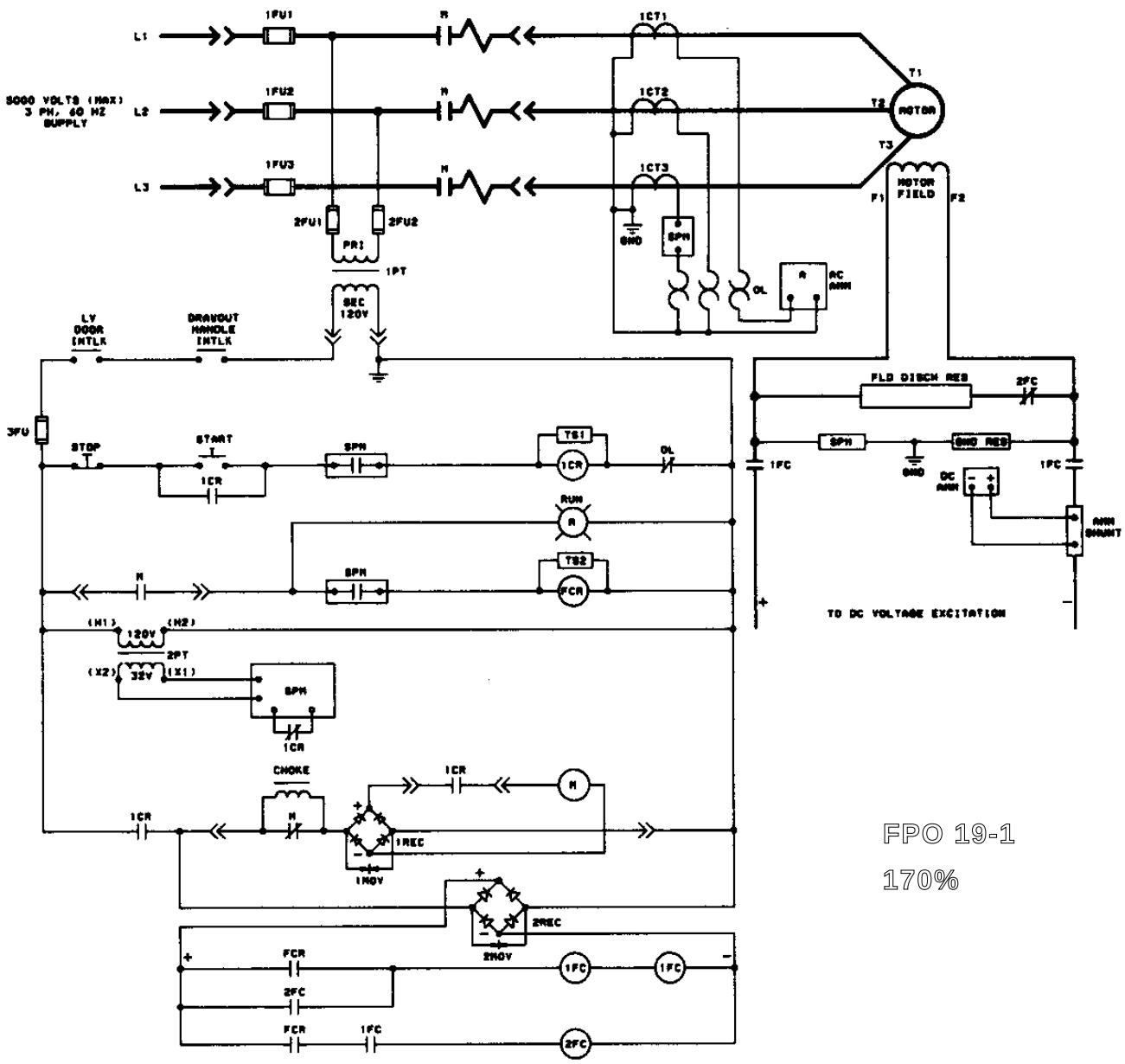

FPO 19-1
170%

We Respond.®

Reduced-Voltage, Primary Reactor, Non-Reversing Synchronous Motor Controller: Class 8198 Type RS1 and RS2

FIG. 1

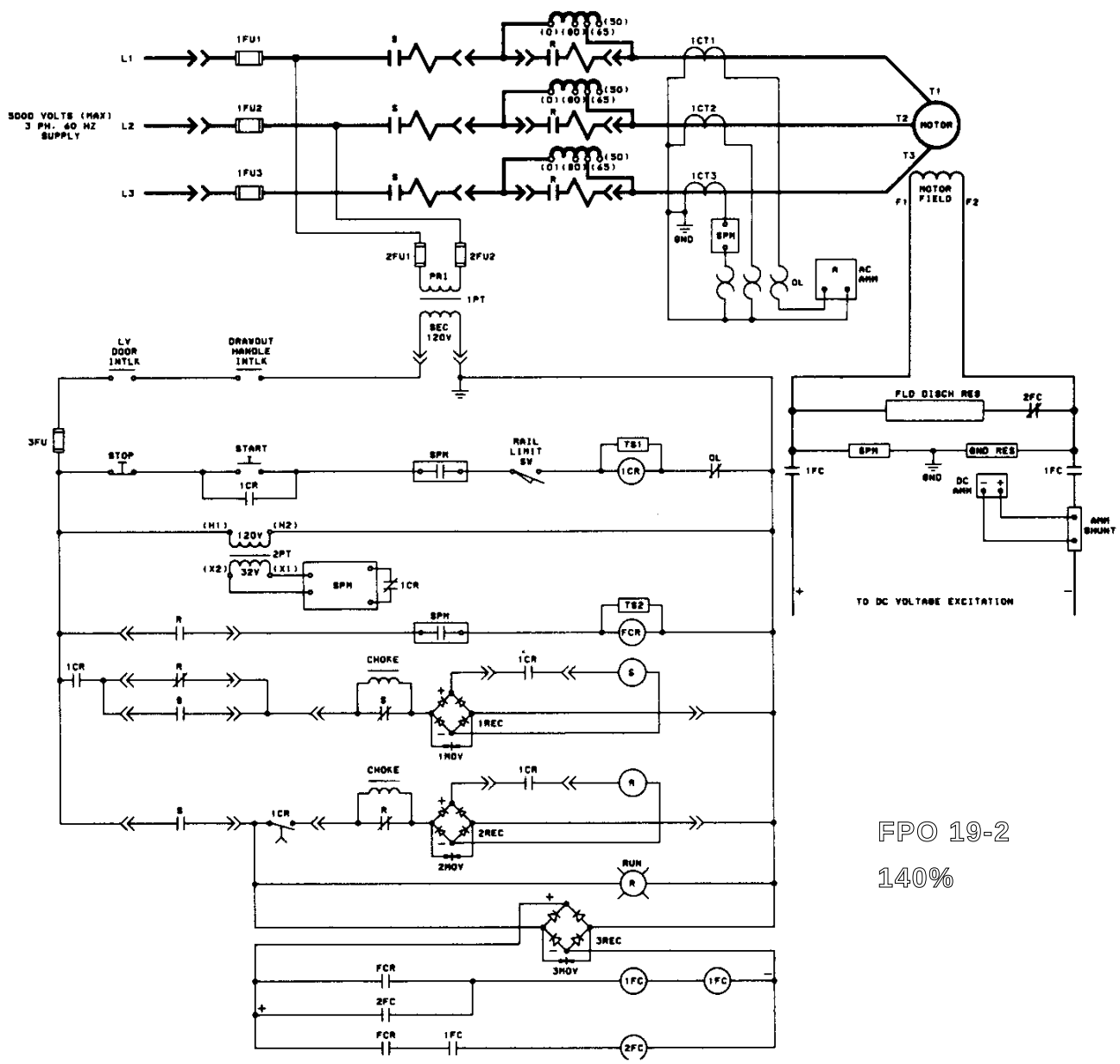

FPO 19-2

140%

Reduced-Voltage, Autotransformer, Non-Reversing Synchronous Motor Controller: Class 8198 Type RSA1 and RSA2

FIG. 1

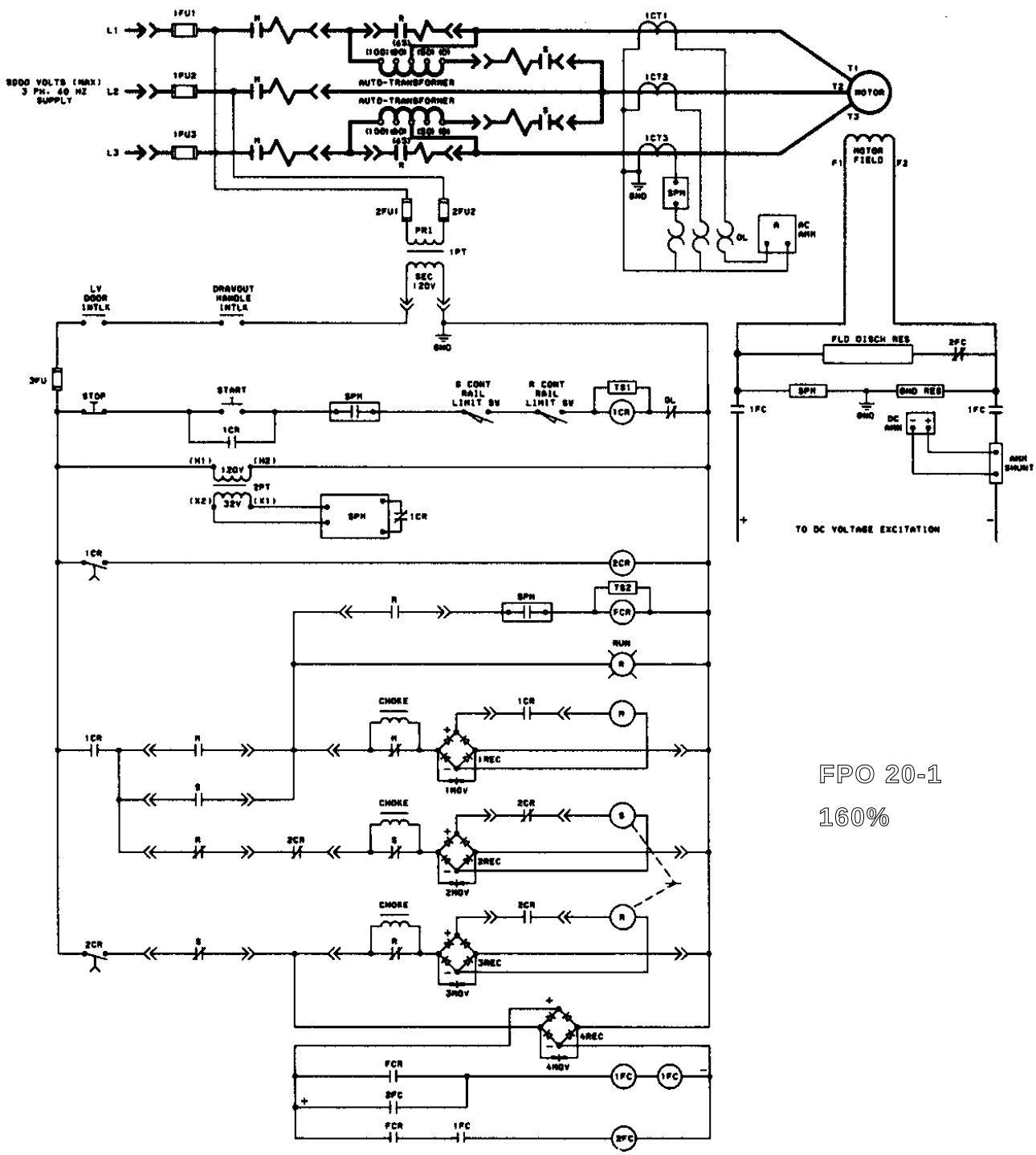

FPO 20-1

160%

We Respond.®

Full-Voltage, Non-Reversing, Brushless Synchronous Motor Controller:
Class 8198 Type FSB1 and FSB2

FIG. 1

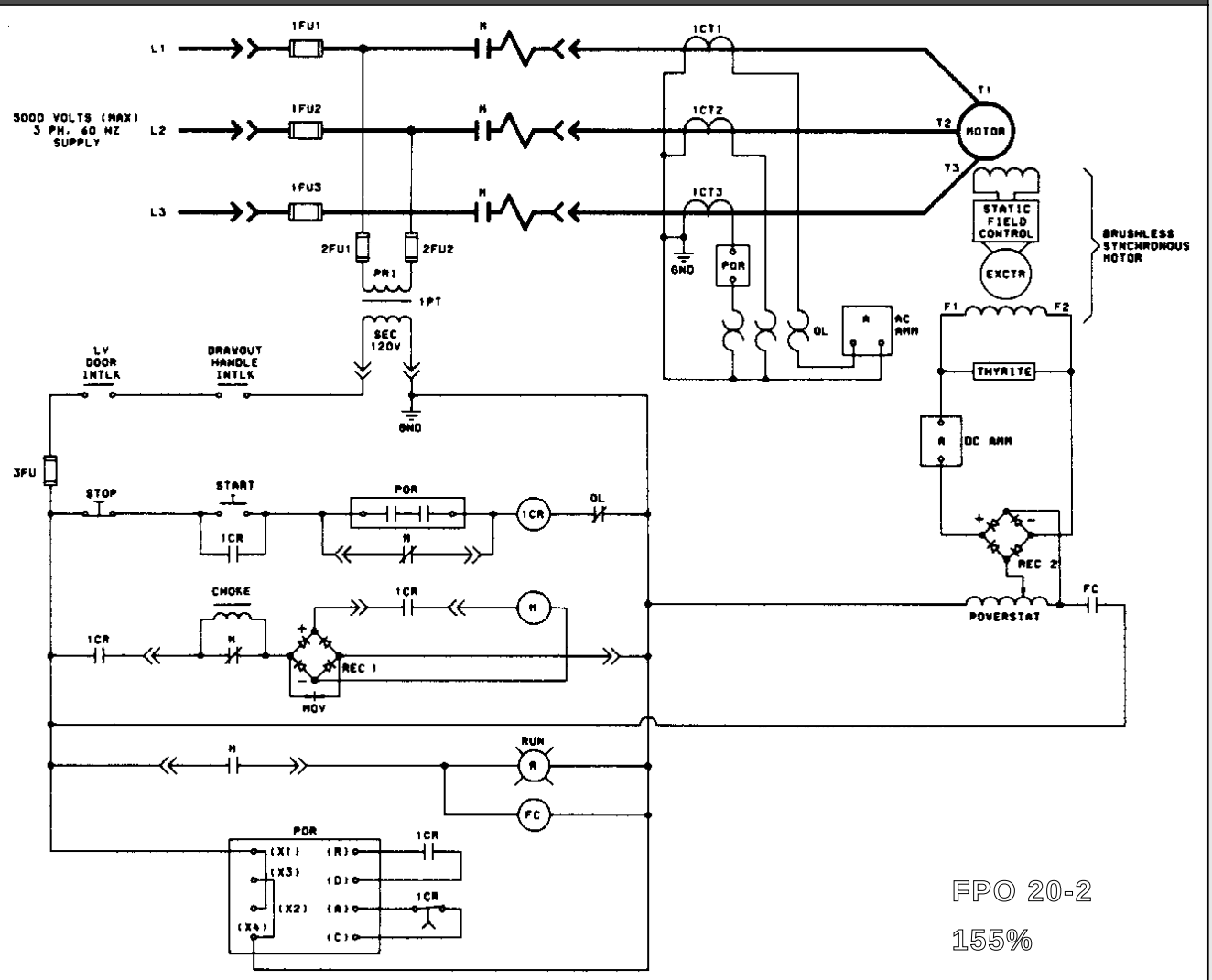

FPO 20-2

155%

Solid State Protective Relays: Class 8430 Type DAS, DASW, DASV and DASVW

FIG. 1

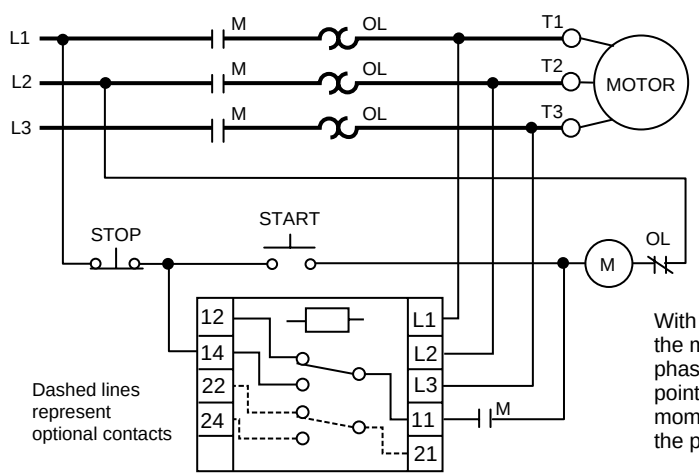

With the line voltage connections directly at the motor terminals, the relay will detect all phase loss conditions ahead of the connection points. However, the motor may sustain a momentary "bump" in the reverse condition if the proper phase sequence is not present.

FIG. 2

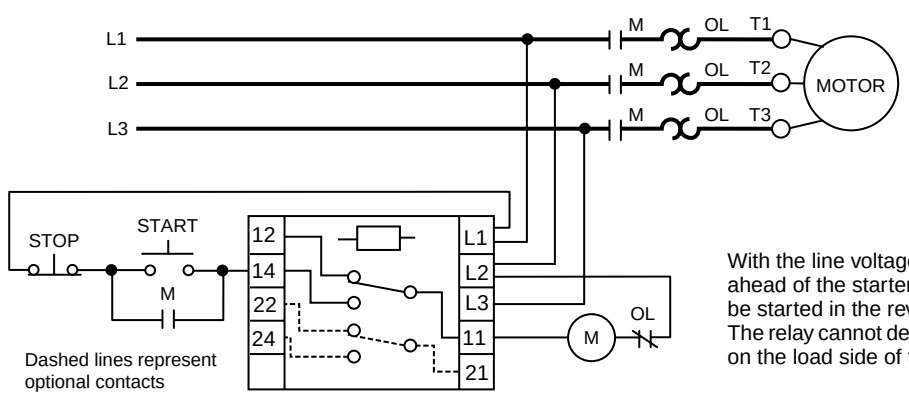

With the line voltage connections ahead of the starter, the motor can be started in the reverse direction. The relay cannot detect a phase loss on the load side of the starter.

Solid State Protective Relays: Class 8430

FIG. 3

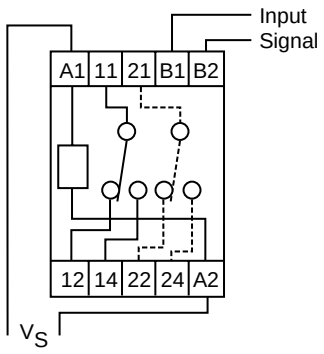

Dashed lines represent optional contacts (DIAW and DUAW devices only)

Type DIA, DIAW, DUA and DUAW

FIG. 4

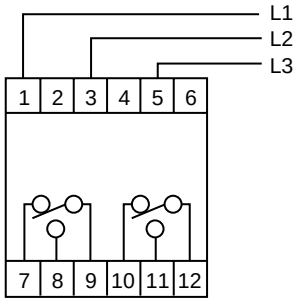

Type MPD

FIG. 5

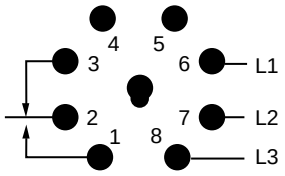

Type MPS 240V

FIG. 6

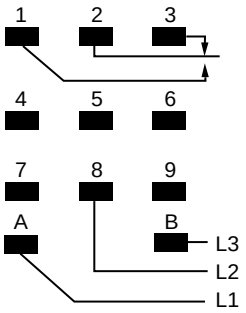

Type MPS 480V

We Respond.®

Load Detector Relay: Class 8430 Type V

FIG. 1

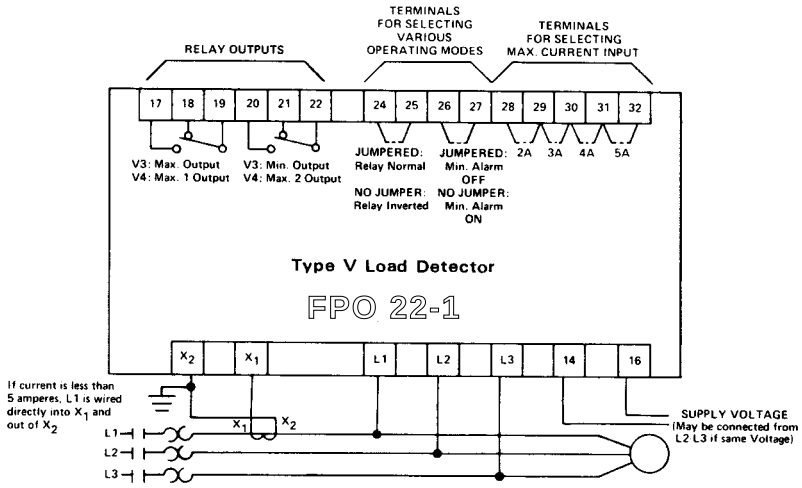

Wiring Diagram

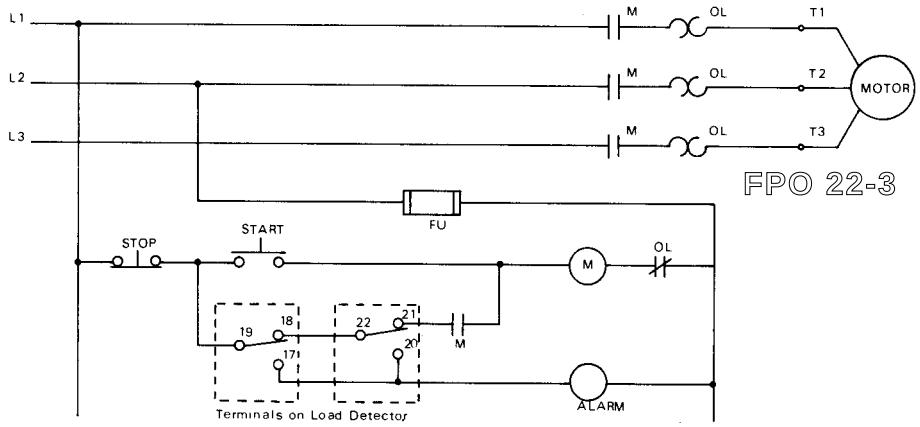

Elementary Diagram (Common Control)

Load Converter Relay: Class 8430 Type G

FIG. 2

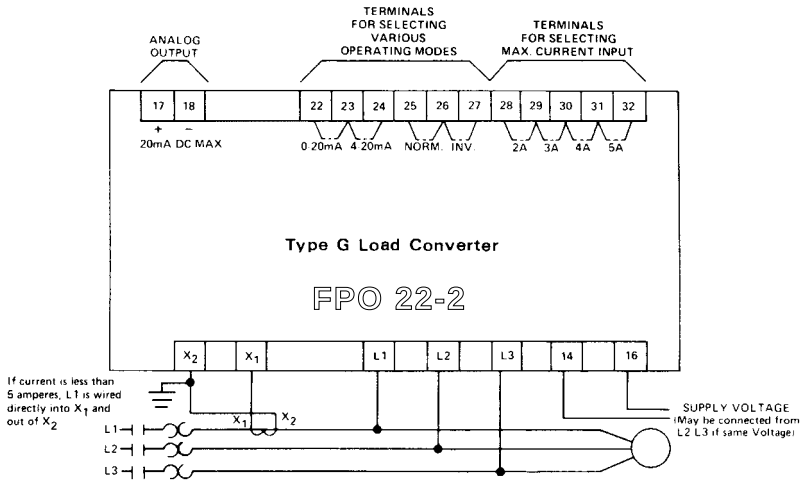

Control Relays: Class 8501 Type CO and CDO

FIG. 1

Type CO6 and CDO6

FIG. 2

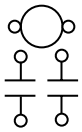

Type CO7 and CDO7

FIG. 3

Type CO8 and CDO8

FIG. 4

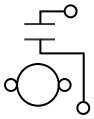

Type CO21 and CDO21

FIG. 5

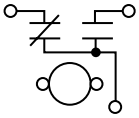

Type CO15 and CDO15

FIG. 6

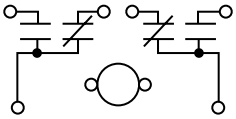

Type CO16, CDO16, CO22 and CDO22

Control Relays: Class 8501 Type UBS

FIG. 7

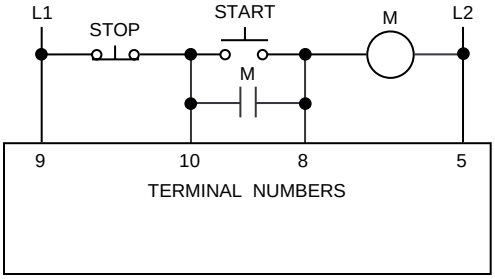

Control Relays: Class 8501 Type K

FIG. 8

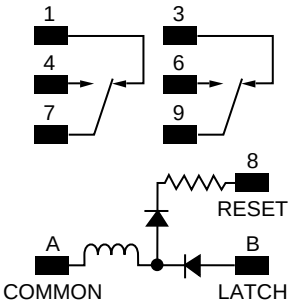

Type KL

FIG. 9

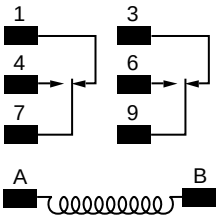

Type KU, KF, KX, KUD, KFD and KXD
2-Pole

FIG. 10

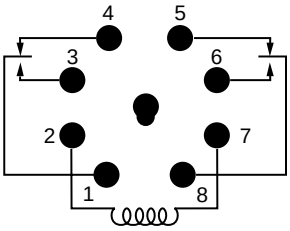

Type KP and KPD
2-Pole

FIG. 11

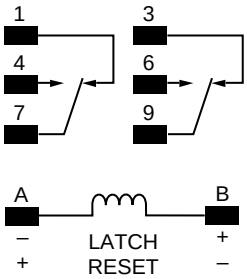

Type KLD

FIG. 12

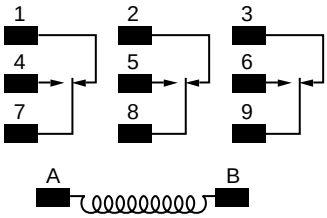

Type KU, KF, KX, KUD, KFD and KXD
3-Pole

FIG. 13

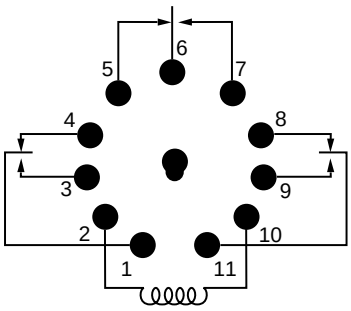

Type KP and KPD
3-Pole

We Respond.®

10 A Control Relay w/ Convertible Contacts: Class 8501 Type X

FIG. 1

2, 3 and 4 Pole Relay All Contacts Convertible

No. of Poles	Type	Pole Number‡ 1	2	3	4
2	XO-20	S	O	O	S
	XO-11	S	O	1	S
	XO-02	S	1	1	S
3	XO-30	O	O	O	S
	XO-21	O	1	O	S
	XO-12	O	1	1	S
	XO-03	1	1	1	S
4	XO-40	O	O	O	O
	XO-31	O	1	O	O
	XO-22	O	1	1	O
	XO-13	O	1	1	1
	XO-04	1	1	1	1

‡O — Normally Open Contact
1 — Normally Closed Contact
S — Space for Future Contact

6 and 8 Pole Relay All Contacts Convertible

No. of Poles	Type	Pole Number‡ 5	6	7	8
		1	2	3	4
6	XO-60	S	O	O	S
		O	O	O	O
	XO-51	S	O	O	S
		O	1	O	O
	XO-42	S	O	O	S
		O	1	1	O
	XO-33	S	1	1	S
		O	1	O	O
	XO-24	S	1	1	S
		O	1	1	O
	XO-15	S	1	1	S
		O	1	1	1
	XO-06	S	1	1	S
		1	1	1	1
8	XO-80	O	O	O	O
		O	O	O	O
	XO-71	O	1	O	O
		O	O	O	O
	XO-62	O	1	1	O
		O	O	O	O
	XO-53	O	1	O	O
		O	1	1	O
	XO-44	O	1	1	O
		O	1	1	O
	XO-35	O	1	1	1
		O	1	1	O
	XO-26	O	1	1	O
		1	1	1	1
	XO-17	O	1	1	1
		1	1	1	1
	XO-08	1	1	1	1
		1	1	1	1

10 and 12 Pole Relay All Contacts Convertible

No. of Poles	Type	Pole Number‡ 9	10	11	12
		5	6	7	8
		1	2	3	4
10	XO-1000	S	O	O	S
		O	O	O	O
		O	O	O	O
	XO-0901	S	O	O	S
		O	1	O	O
		O	O	O	O
	XO-0802	S	O	O	S
		O	1	1	O
		O	O	O	O
	XO-0703	S	O	O	S
		O	1	1	O
		O	1	O	O
	XO-0604	S	O	O	S
		O	1	1	O
		O	1	1	O
	XO-0505	S	O	O	S
		O	1	1	1
		O	1	1	O
	XO-0406	S	1	1	S
		O	1	1	O
		O	1	1	O
	XO-0307	S	1	1	S
		O	1	1	1
		O	1	1	O
	XO-0208	S	1	1	S
		O	1	1	O
		1	1	1	1
	Maximum of 8 N.C. Poles				
12	XO-1200	O	O	O	O
		O	O	O	O
		O	O	O	O
	XO-1101	O	1	O	O
		O	O	O	O
		O	O	O	O
	XO-1002	O	1	1	O
		O	O	O	O
		O	O	O	O
	XO-0903	O	1	1	O
		O	1	O	O
		O	O	O	O
	XO-0804	O	1	1	O
		O	1	1	O
		O	O	O	O
	XO-0705	O	1	1	O
		O	1	1	O
		O	1	O	O
	XO-0606	O	1	1	O
		O	1	1	O
		O	1	1	O
	XO-0507	O	1	1	O
		O	1	1	O
		O	1	1	1
	XO-0408	O	1	1	O
		O	1	1	O
		1	1	1	1
	Maximum of 8 N.C. Poles				

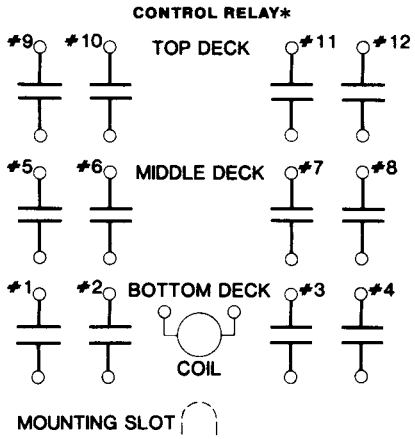

FPO 27-1

* Note: Class 8501 Type XO••••XL, XDO••••XL, XDO••••XDL and XO••••XDL latch relays use the same diagram except for the addition of an unlatch coil (8 poles maximum).

Timer Attachment: Class 9999 Type XTD and XTE

FIG. 2

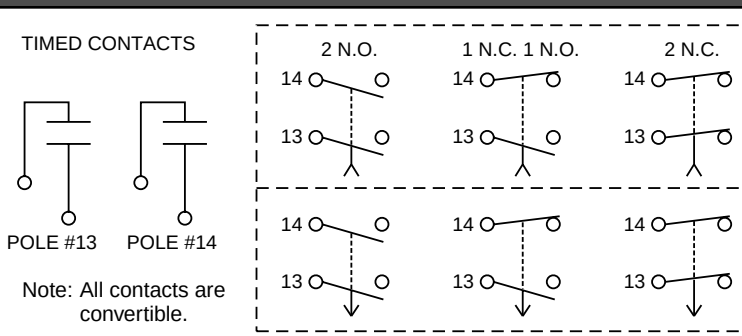

Note: All contacts are convertible.

No. of Timed Contacts	Class 9999 Type	Pole No.* 13	14
2	XTD XTE	O	1

* O = N.O. Contact
1 = N.C. Contact

Miniature Control Relays: Class 8501 Type RS and RSD

FIG. 1

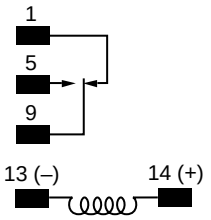

Type RS41 and RSD41

FIG. 2

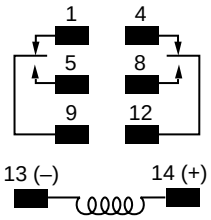

Type RS42 and RSD42

FIG. 3

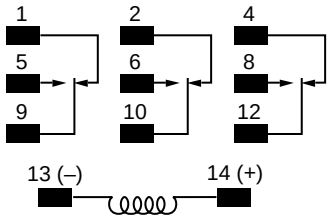

Type RS43 and RSD43

FIG. 4

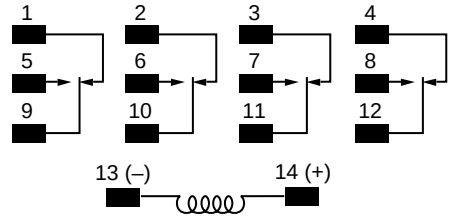

Type RS4, RSD4, RS14, RSD14, RS24, RSD24, RS34, RSD34, RS44 and RSD44

Control Relays w/ Intrinsically Safe Terminals: Class 8501 Type TO41 and TO43

FIG. 5

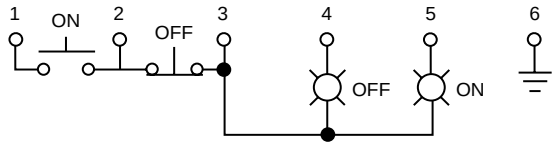

Intrinsically Safe Terminals

FIG. 6

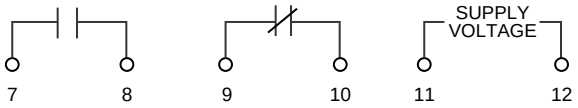

Non-Hazardous Location Terminals

Sensing Relays: RM2 LA1/LG1

FIG. 7

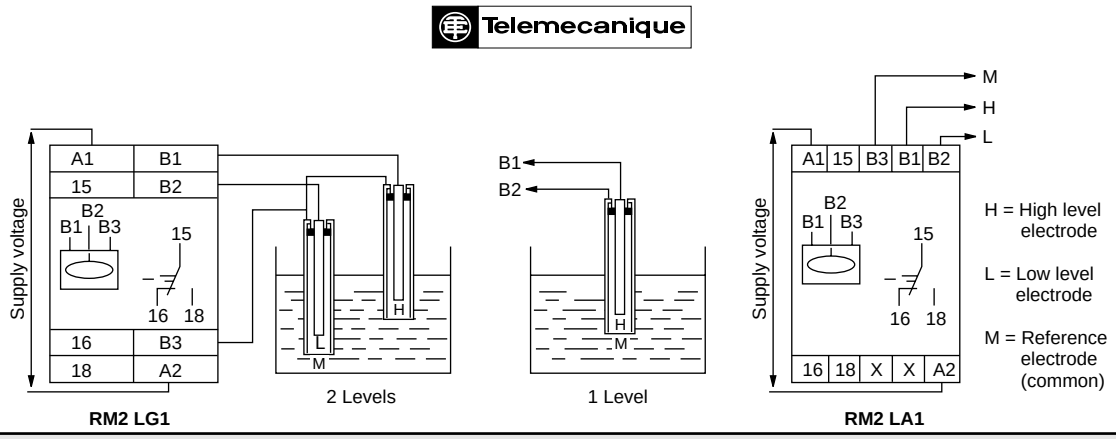

We Respond.®

Control Relays: CA2 and CA3

FIG. 1

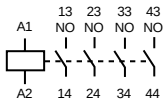

4 N.O. Instantaneous
CA2 DN40 and CA3 DN40

FIG. 2

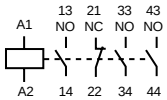

3 N.O. & 1 N.C. Instantaneous
CA2 DN31 and CA3 DN31

FIG. 3

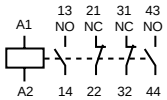

2 N.O. & 2 N.C. Instantaneous
CA2 DN22 and CA3 DN22

FIG. 4

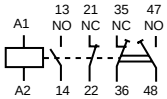

2 N.O. & 2 N.C. Instantaneous, w/ 2 Make-Before-Break
CA2 DC22 and CA3 DC22

FIG. 5

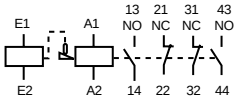

2 N.O. & 2 N.C. Instantaneous w/ Mechanical Latch
CA2 DK22 and CA3 DK22

Front-Mounted Standard Instantaneous Auxiliary Contact Blocks: LA1

FIG. 6

1 N.O. & 1 N.C.
LA1 DN11

FIG. 7

2 N.O.
LA1 DN20

FIG. 8

2 N.C.
LA1 DN02

FIG. 9

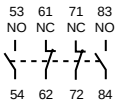

2 N.O. & 2 N.C.
LA1 DN22

FIG. 10

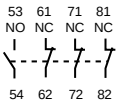

1 N.O. & 3 N.C.
LA1 DN13

FIG. 11

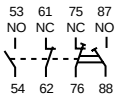

2 N.O. & 2 N.C. w/ 2 Make-Before-Break
LA1 DC22

FIG. 12

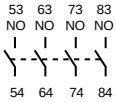

4 N.O.
LA1 DN40

FIG. 13

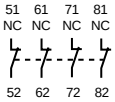

4 N.C.
LA1 DN04

FIG. 14

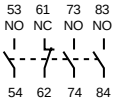

3 N.O. & 1 N.C.
LA1 DN31

Front-Mounted Damp- and Dust-Protected Instantaneous Auxiliary Contact Blocks: LA1

FIG. 15

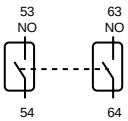

2 N.O.
LA1 DX20

FIG. 16

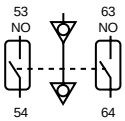

2 N.O. w/ Grounding Screw
LA1 DY20

FIG. 17

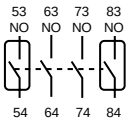

2 Dusttight N.O. & 2 N.O.
LA1 DZ40

FIG. 18

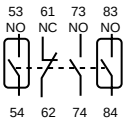

2 Dusttight N.O. & 1 N.O. & 1 N.C.
LA1 DZ31

Front-Mounted Time Delay Auxiliary Contacts: LA2 and LA3

FIG. 19

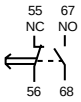

On Delay, 1 N.O. & 1 N.C.
LA2 DT

FIG. 20

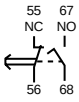

On Delay, 1 N.C. w/ 1 Offset N.O.
LA2 DS

FIG. 21

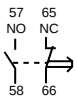

Off Delay, 1 N.O. & 1 N.C.
LA3 DR

Front-Mounted Mechanical Latch Adder Blocks: LA6

FIG. 22

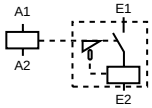

LA6 DK1

FIG. 23

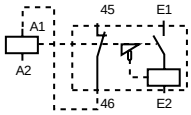

LA6 DK2

Side-Mounted Auxiliary Contact Blocks: LA8

FIG. 24

1 N.O. & 1 N.C. Instantaneous
LA8 DN11

FIG. 25

2 N.O. Instantaneous
LA8 DN20

Miniature IEC Relays: Class 8501 Type PR 1

FIG. 1

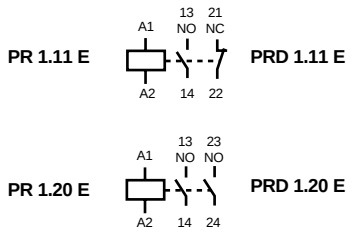

Type PR 1 and PRD 1 Relays

FIG. 2

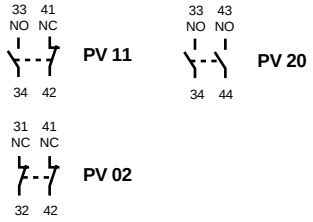

Type PV Adder Decks for PR 1.20 E

Alternating Relays: Class 8501 Type PHA

FIG. 3

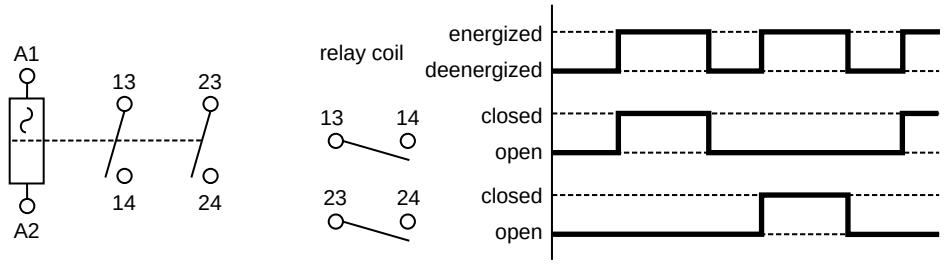

We Respond.®

Power Terminals

FIG. 1

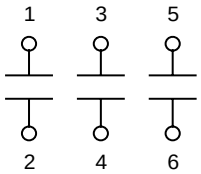

Power terminals on contactors, overloads and switches are single digits – odd for line side terminals and even for load side terminals.

Coil Terminals

FIG. 2

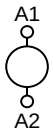

Coil terminals are designated by a letter and a number. Terminals for a single winding coil are designated “A1” and “A2”.

Auxiliary Contact Terminals

FIG. 3

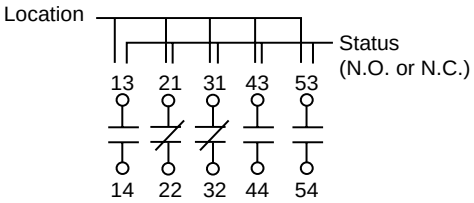

Auxiliary contacts on contactors, relays and push button contacts use 2-digit terminal designations, as shown in the diagram above. The first digit indicates the location of the contact on the device. The second digit indicates the status of the contacts, N.O. or N.C. “1” and “2” indicate N.C. contacts. “3” and “4” indicate N.O. contacts.

Overload Relay Contact Terminals

FIG. 4

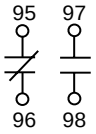

With Isolated
N.O. Alarm Contact

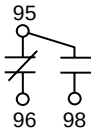

With Non-Isolated
N.O. Alarm Contact

Overload contact terminals are marked with two digits. The first digit is “9”. The second digits are “5” and “6” for a N.C. and “7” and “8” for a N.O. isolated contact. If the device has a non-isolated alarm contact (single pole), the second digits of the N.O. terminals are “5” and “8”.

Class 8502 Type PD or PE Contactor w/ Class 9065 Type TR Overload Relay

FIG. 5

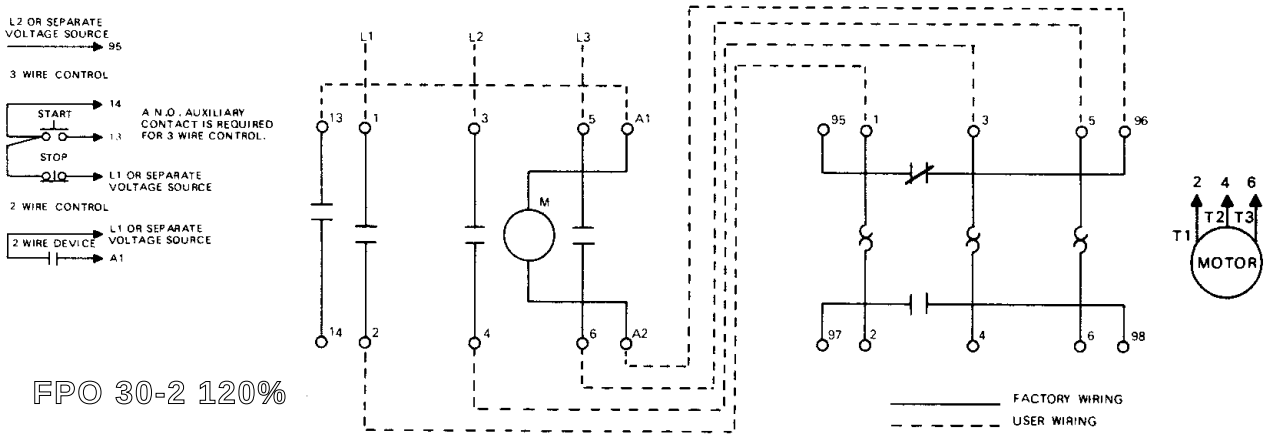

FPO 30-2 120%

Wiring Diagram

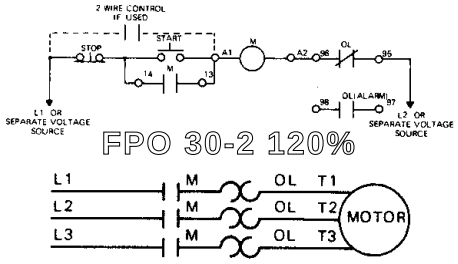

FPO 30-2 120%

Elementary Diagram

Class 8502 Type PG or PD Contactor w/ Class 9065 Type TD Overload Relay

FIG. 1

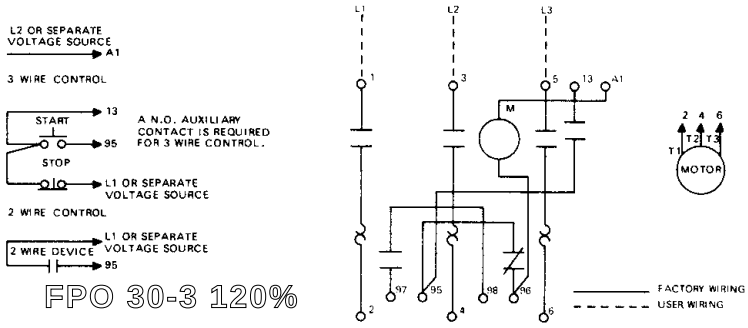

Wiring Diagram

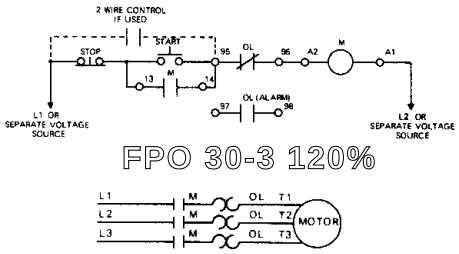

Elementary Diagram

Class 8502 Type PE Contactor w/ Class 9065 Type TE Overload Relay

FIG. 2

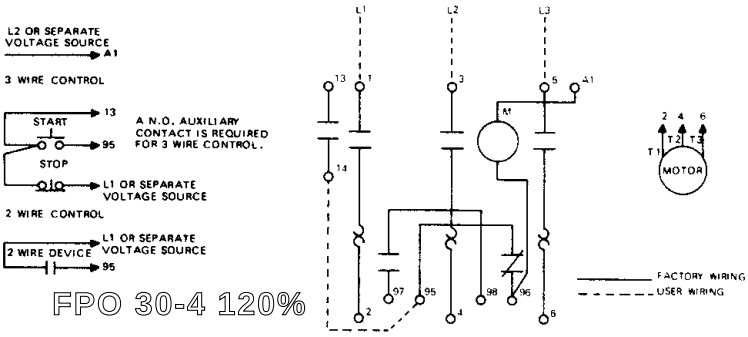

Wiring Diagram

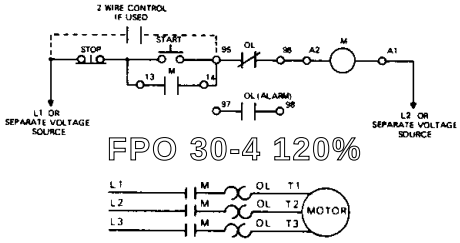

Elementary Diagram

Class 8502 Type PF, PG or PJ Contactor w/ Class 9065 Type TF, TG or TJ Overload Relay

FIG. 3

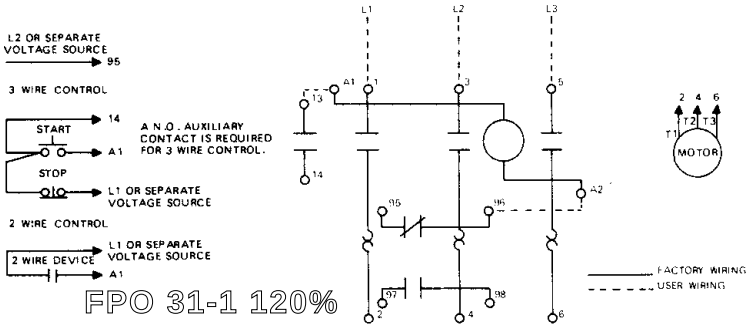

Wiring Diagram

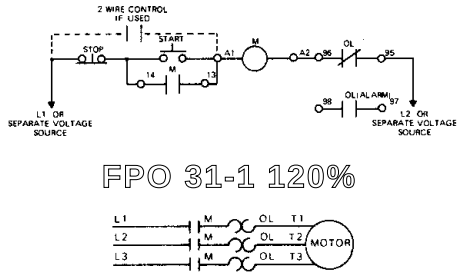

Elementary Diagram

We Respond.®

Class 8502 Type PJ or PK Contactor w/ Class 9065 Type TJE Overload Relay

FIG. 4

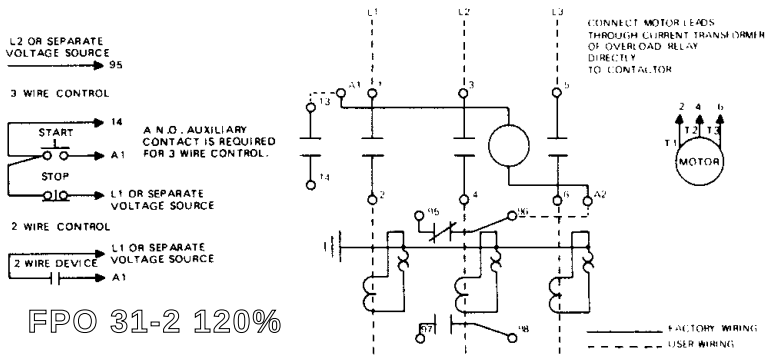

Wiring Diagram

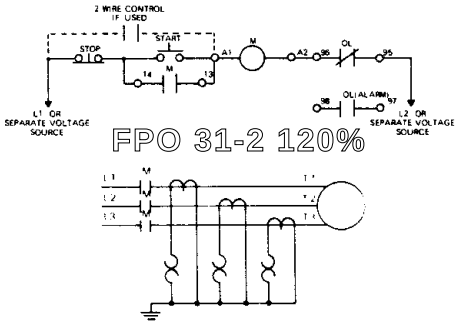

Elementary Diagram

Class 8702 Type PDV or PEV Reversing Contactor w/ Class 9065 Type TR Overload Relay

FIG. 1

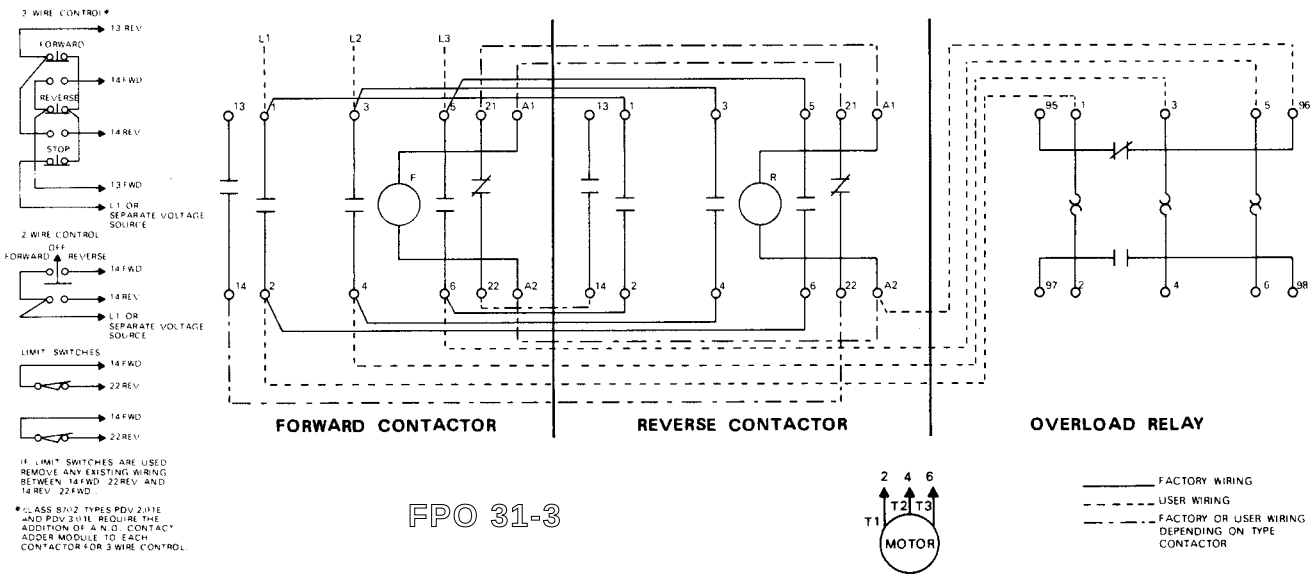

Elementary Diagram

Elementary Diagram

AC Magnetic Contactors: Class 8502 Type S

FIG. 1

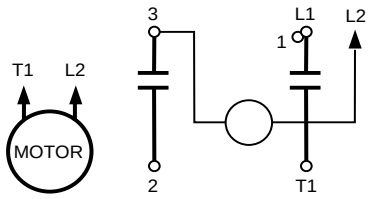

1-Pole, Size 0 and 1

FIG. 2

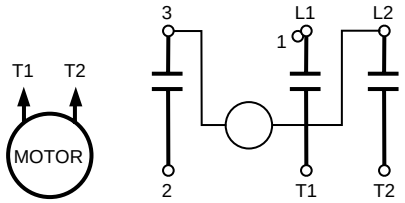

2-Pole, Size 00, 0 and 1

FIG. 3

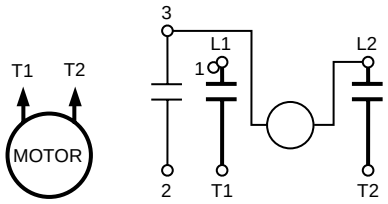

2-Pole, Size 2 to 5

FIG. 4

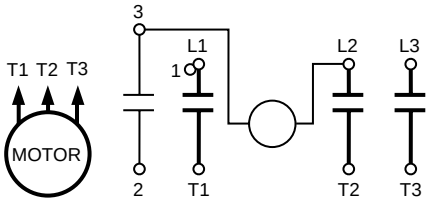

3-Pole, Size 00 to 5

FIG. 5

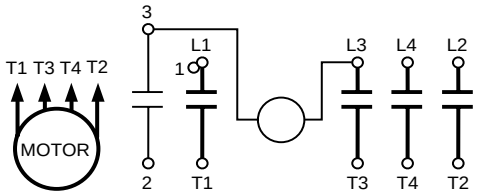

4-Pole, Size 0, 1 and 2

FIG. 6

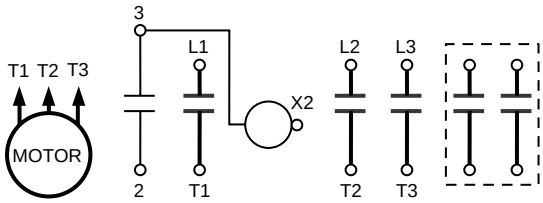

5-Pole, Size 0, 1 and 2

FIG. 7

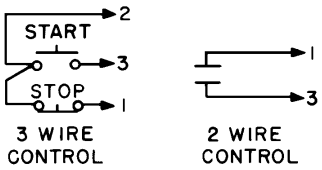

2- and 3-Wire Control for Figure 1 to 5

FIG. 8

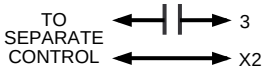

Separate Control for Figure 6

We Respond.®

Size 6, 3-Pole Contactor – Common Control
Class 8502 Type SH Series B

FIG. 1

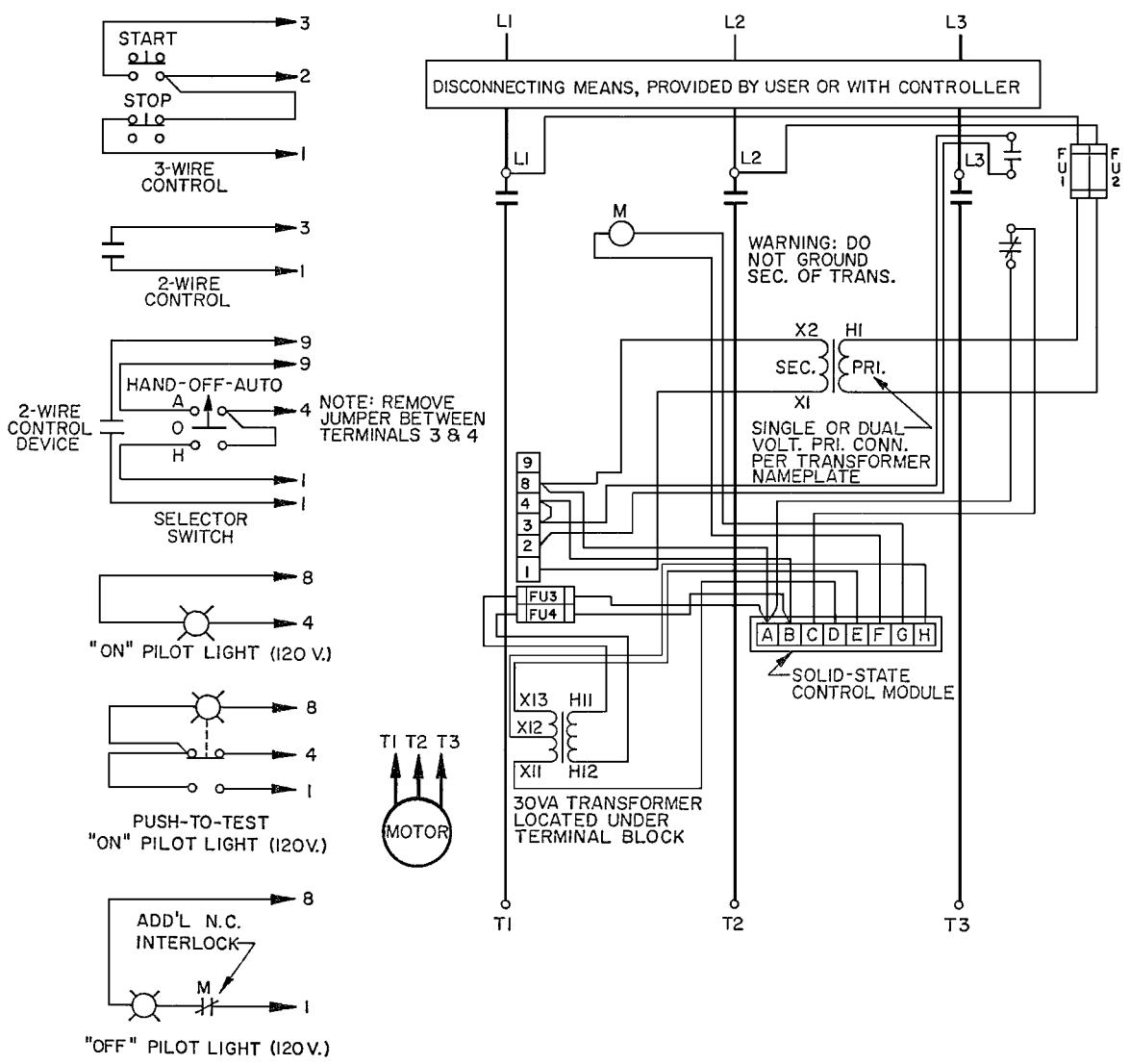

Wiring Diagram

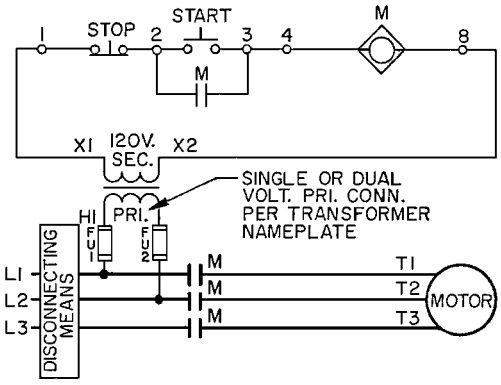

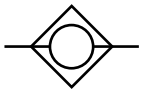

This symbol denotes the coil function, provided by a solid-state control module, 30 VA transformer, two fuses in the secondary of the transformer, N.C. electrical interlock and DC magnet coil.

Short-Circuit Protection

Rating of branch circuit protective device must comply with applicable electrical codes and the following limitations:

Type of Device	Max. Rating
Class K5 or RK5 time-delay fuse	600 A
Class J, T or L fuse	1200 A
Inverse-time circuit breaker	800 A

Elementary Diagram

Size 6, 3-Pole Contactor – Separate Control
Class 8502 Type SH Form S Series B

FIG. 1

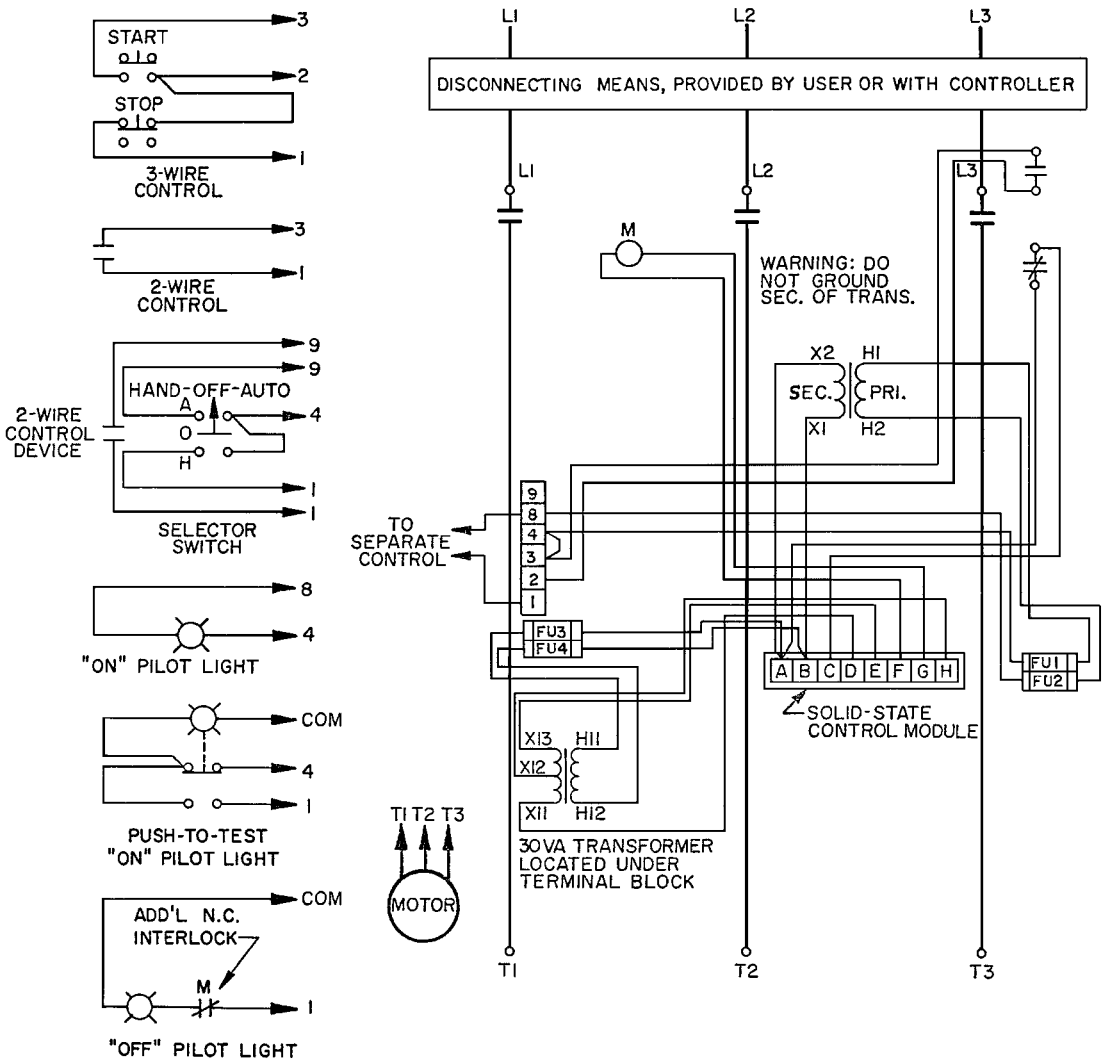

Wiring Diagram

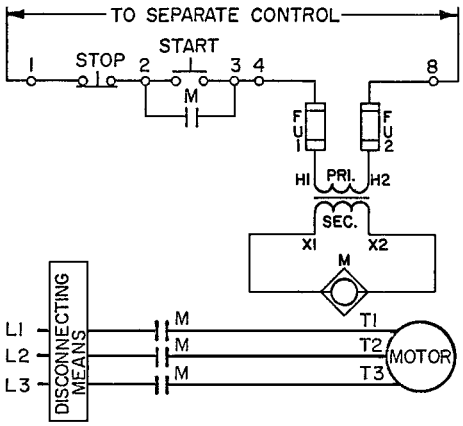

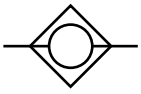

This symbol denotes the coil function, provided by a solid-state control module, 30 VA transformer, two fuses in the secondary of the transformer, N.C. electrical interlock and DC magnet coil.

Short-Circuit Protection

Rating of branch circuit protective device must comply with applicable electrical codes and the following limitations:

Type of Device	Max. Rating
Class K5 or RK5 time-delay fuse	600 A
Class J, T or L fuse	1200 A
Inverse-time circuit breaker	800 A

Elementary Diagram

We Respond.®

Size 7, 3-Pole Contactor – Common Control
Class 8502 Type SJ Series A

FIG. 1

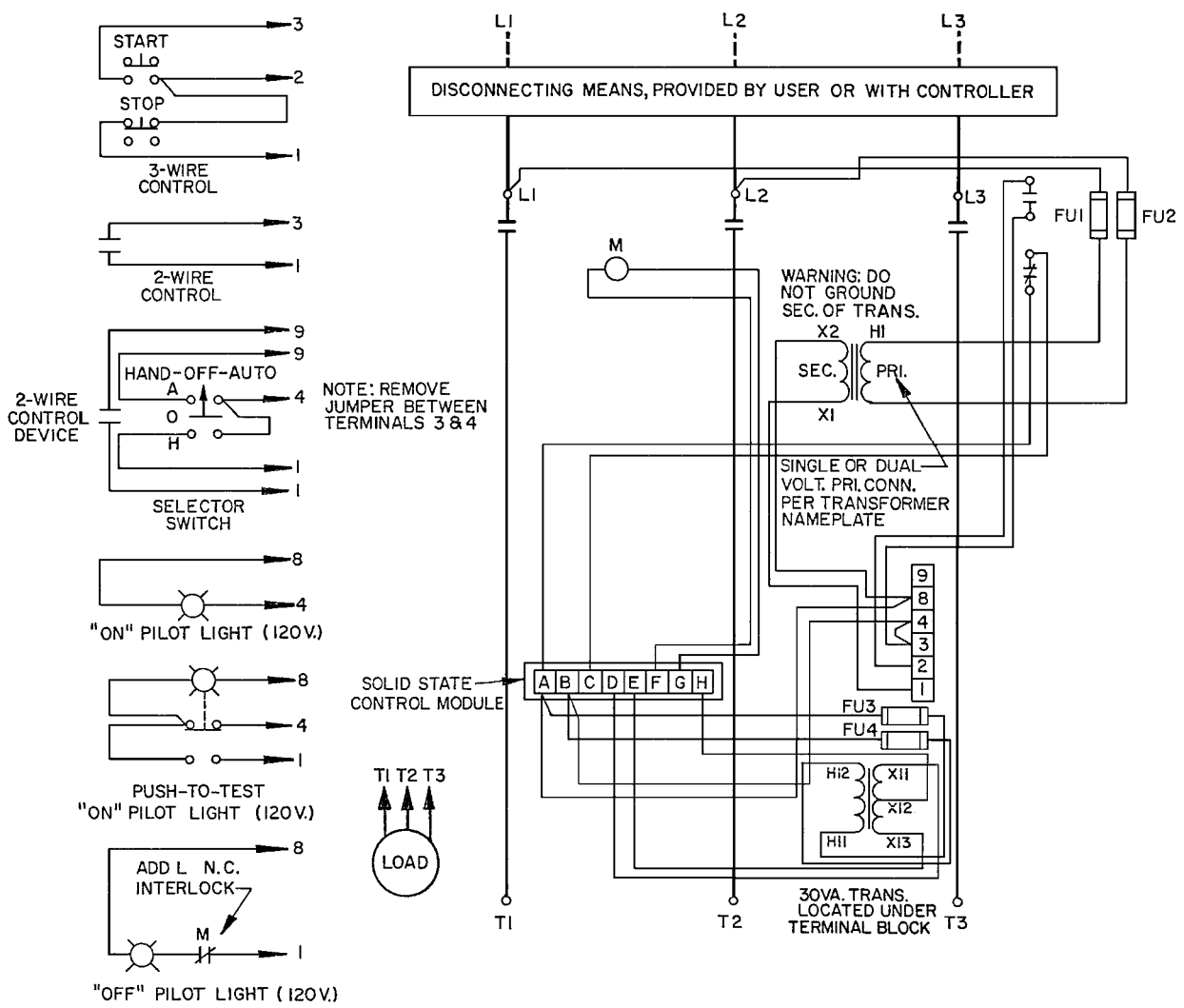

Wiring Diagram

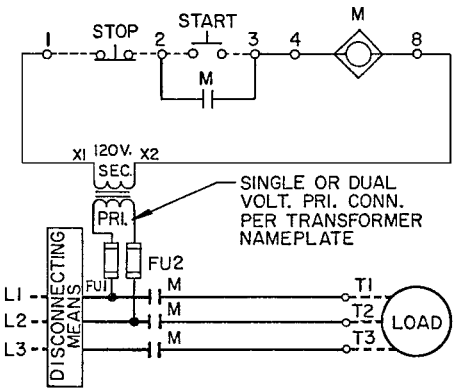

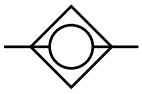

This symbol denotes the coil function, provided by a solid-state control module, 30 VA transformer, two fuses in the secondary of the transformer, N.C. electrical interlock and DC magnet coil.

Short-Circuit Protection

Rating of branch circuit protective device must comply with applicable electrical codes and the following limitations:

Type of Device	Max. Rating
Class K5 or RK5 time-delay fuse	600 A
Class J, T or L fuse	1600 A
Inverse-time circuit breaker	2000 A

Elementary Diagram

Size 7, 3-Pole Contactor – Separate Control
Class 8502 Type SJ Form S Series A

FIG. 1

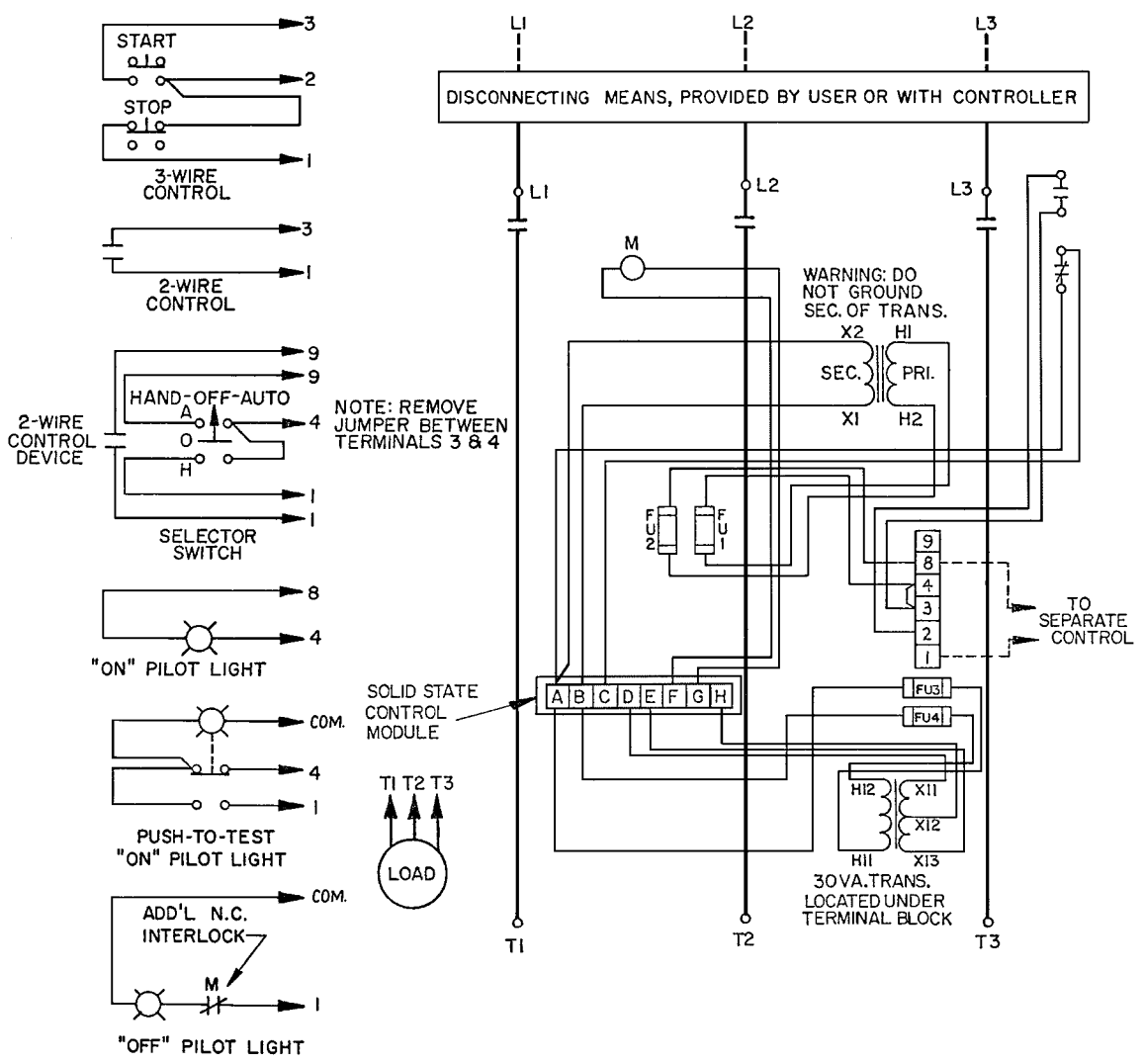

Wiring Diagram

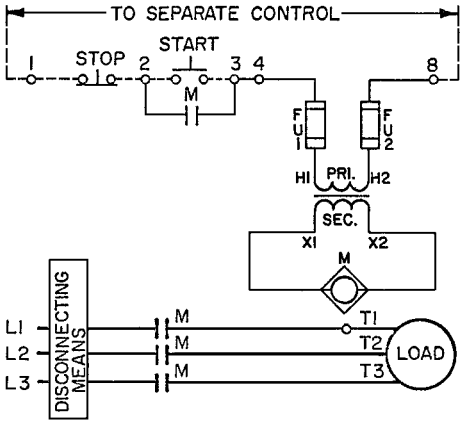

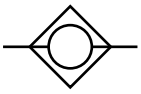

This symbol denotes the coil function, provided by a solid-state control module, 30 VA transformer, two fuses in the secondary of the transformer, N.C. electrical interlock and DC magnet coil.

Short-Circuit Protection

Rating of branch circuit protective device must comply with applicable electrical codes and the following limitations:

Type of Device	Max. Rating
Class K5 or RK5 time-delay fuse	600 A
Class J, T or L fuse	1600 A
Inverse-time circuit breaker	2000 A

Elementary Diagram

We Respond.®

3- and 4-Pole Contactors: LC1 and LP1
(Terminal markings conform to standards EN 50011 and 50012)

FIG. 1

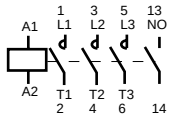

D09 10 to D32 10

FIG. 2

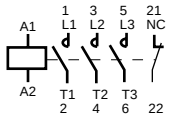

D09 01 to D32 01

FIG. 3

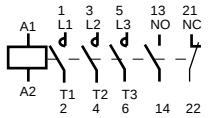

D40 11 to D95 11

FIG. 4

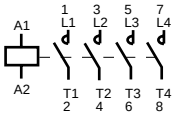

D12 004 to D80 004

FIG. 5

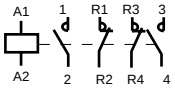

D12 008 and D25 008

FIG. 6

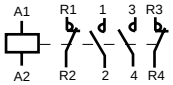

D40 008 to D80 008

Front-Mounted Standard Instantaneous Auxiliary Contact Blocks: LA1

FIG. 7

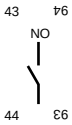

1 N.O.
LA1 DN 10

FIG. 8

1 N.O. & 1 N.C
LA1 DN 11

FIG. 9

2 N.O.
LA1 DN 20

FIG. 10

2 N.C.
LA1 DN 02

FIG. 11

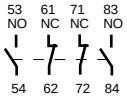

2 N.O. & 2 N.C.
LA1 DN 22

FIG. 12

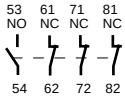

1 N.O. & 3 N.C.
LA1 DN 13

FIG. 13

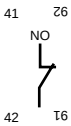

1 N.C.
LA1 DN 01

FIG. 14

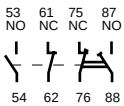

2 N.O. & 2 N.C. w/
2 Make-Before-Break
LA1 DC 22

FIG. 15

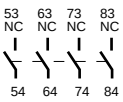

4 N.O.
LA1 DN 40

FIG. 16

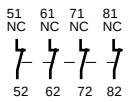

4 N.C.
LA1 DN 04

FIG. 17

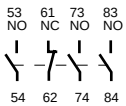

3 N.O. & 1 N.C.
LA1 DN 31

Front-Mounted Damp- and Dust-Protected (IP 54) Instantaneous Auxiliary Contact Blocks: LA1

FIG. 18

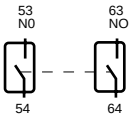

2 N.O.
LA1 DX 20

FIG. 19

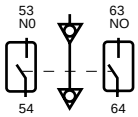

2 N.O. (5-24 V) w/ Grounding Screw
LA1 DY 20

FIG. 20

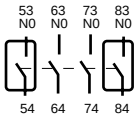

2 Dusttight N.O. (24-50 V) & 2 N.O.
LA1 DZ 40

FIG. 21

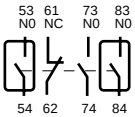

2 Dusttight N.O. (24-50 V) & 1 N.O. & 1 N.C.
LA1 DZ 31

Front-Mounted Time Delay Auxiliary Contacts: LA2 and LA3

FIG. 22

On Delay, 1 N.O. & 1 N.C.
LA2 DT•

FIG. 23

On Delay, 1 N.O. w/ 1 Offset N.O.
LA2 DS•

FIG. 24

Off Delay, 1 N.O. & 1 N.C.
LA3 DR•

Front-Mounted Mechanical Latch Adder Blocks: LA6

FIG. 25

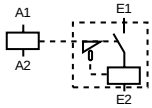

LA6 DK 1

FIG. 26

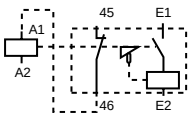

LA6 DK 2, LA6 DK 3

Side-Mounted Auxiliary Contact Blocks: LA8

FIG. 27

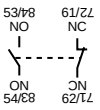

1 N.O. & 1 N.C. Instantaneous
LA8 DN 11

FIG. 28

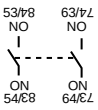

2 N.O. Instantaneous
LA8 DN 20

Input Modules: LA4

FIG. 1

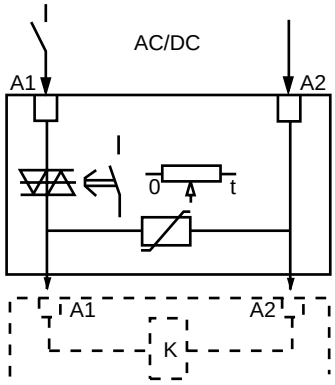

On Delay Timer Module
LA4 DT

FIG. 2

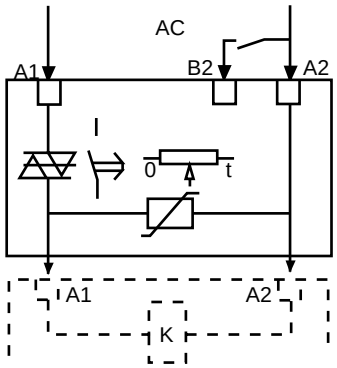

Off Delay Timer Module
LA4 DR

FIG. 3

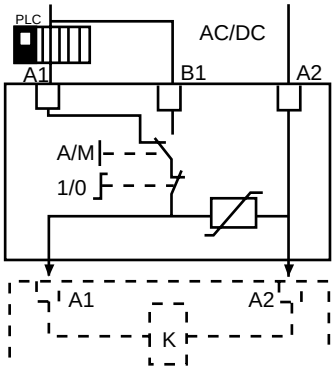

Auto-Manual-Off Control Module
LA4 DM

FIG. 4

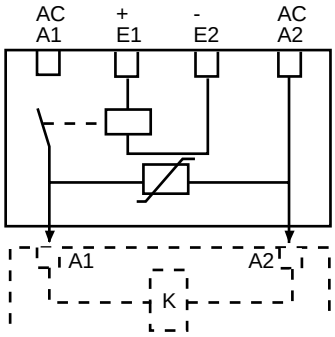

Relay Interface Amplifier Module
LA4 DF

FIG. 5

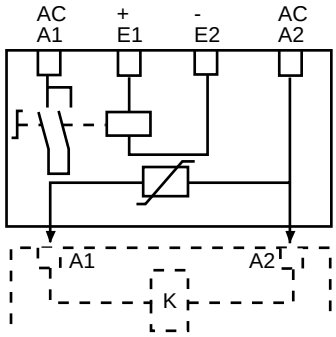

Relay Interface Amplifier Module w/
Manual Override, LA4 DL

FIG. 6

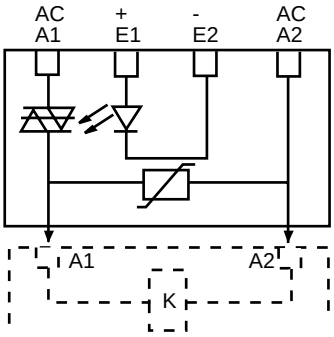

Solid State Interface Amplifier Module
LA4 DW

Contactors: LC2, LP2 and LA9

FIG. 7

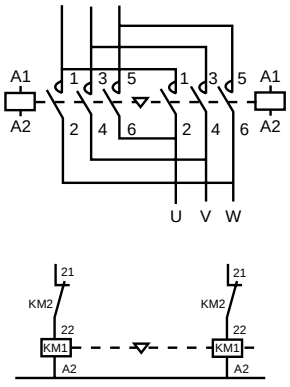

Reversing Contactor
3-Pole, for Motor Control
LC2, LP2 D0901 to D3201

FIG. 8

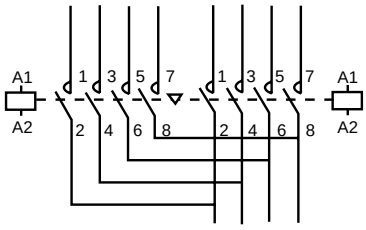

Transfer Contactor,
4-Pole, Mechanically Interlocked
LC2, LP2 D12004 to D8004

FIG. 9

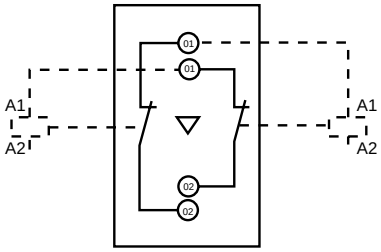

Mechanical Interlock w/ Electrical Interlock
LA9 D0902, D4002 and D8002

1-Pole, 1-Phase Magnetic Starters, Size 00 to 3: Class 8536 Type S

FIG. 1

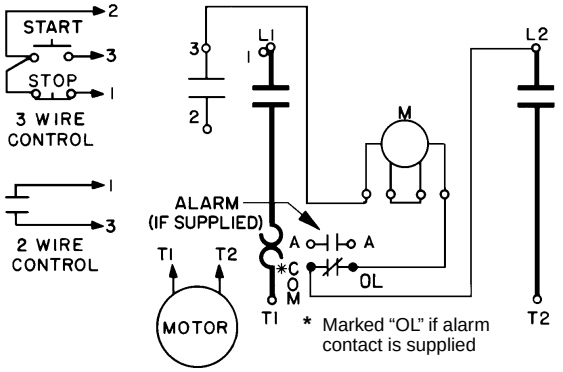

Wiring Diagram

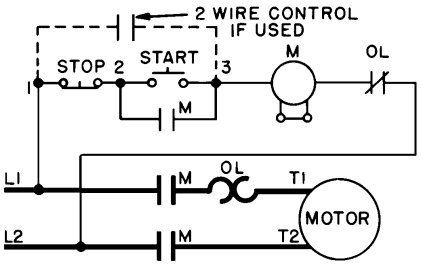

Elementary Diagram

Single Phase Starter w/ Single Voltage Motor

FIG. 2

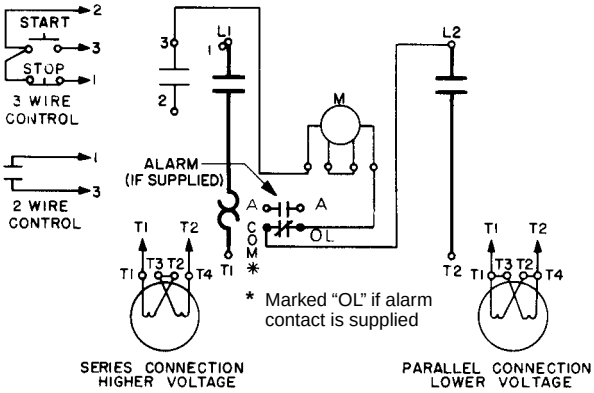

Wiring Diagram

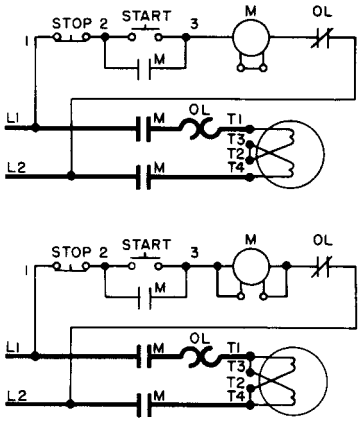

Note: Starters are factory-wired with coil connected for the higher voltage. If starter is used on lower voltage, connect per coil diagram.

Elementary Diagram

Single Phase Starter w/ Dual Voltage Motor

3-Pole, 3-Phase Magnetic Starters, Size 00 to 3, Connected for Single Phase: Class 8536 Type S

FIG. 3

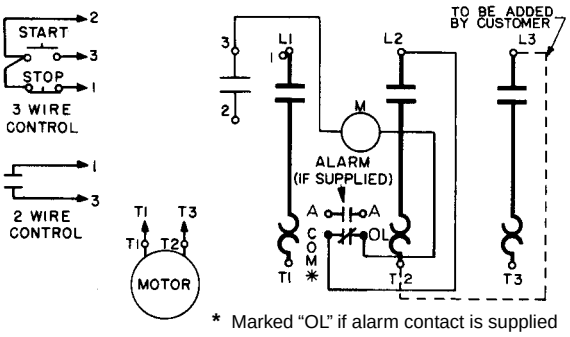

Wiring Diagram

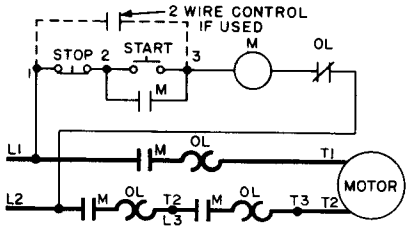

Elementary Diagram

3-Phase Starter Connected for Single Phase, Single Voltage Motor

4-Pole, 2-Phase Magnetic Starters: Class 8536 Type S

FIG. 1

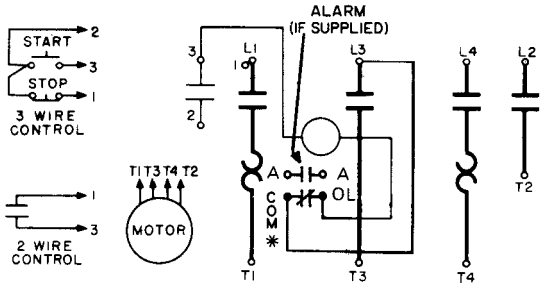

* Marked "OL" if alarm contact is supplied

Wiring Diagram

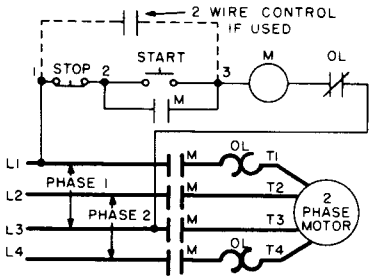

Elementary Diagram

Size 0, 1 and 2

FIG. 2

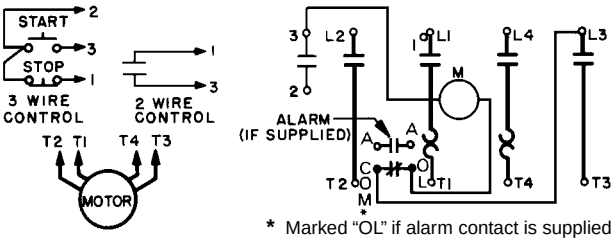

* Marked "OL" if alarm contact is supplied

Wiring Diagram

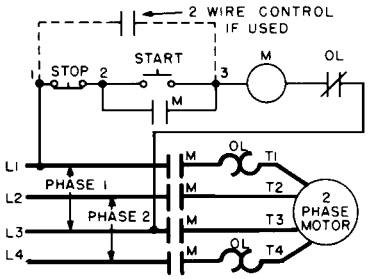

Elementary Diagram

Size 3 and 4

3-Pole, 3-Phase Magnetic Starters: Class 8536 Type S

FIG. 3

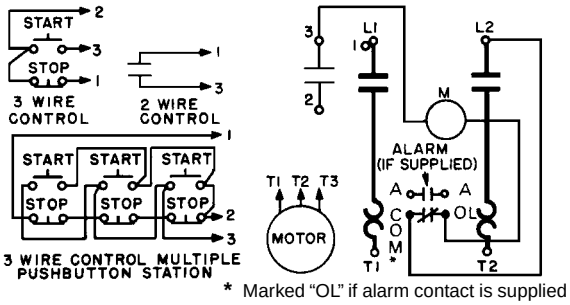

* Marked "OL" if alarm contact is supplied

Wiring Diagram

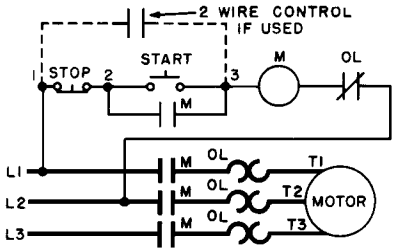

Elementary Diagram

Size 00 to 4

FIG. 4

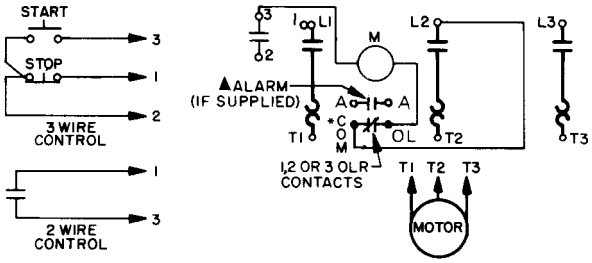

▲ If alarm contact is supplied, a single (3 thermal unit) overload block is furnished, fed from 3 current transformers.

* Marked "OL" if alarm contact is supplied

Wiring Diagram

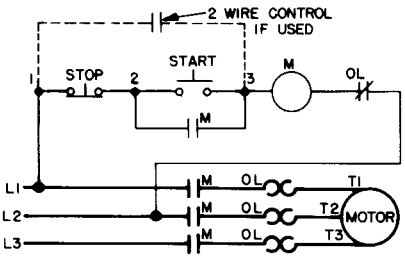

Elementary Diagram

Size 5

We Respond.®

3-Pole, 3-Phase Magnetic Starters, Size 6 – Common Control
Class 8536/8538/8539 Type SH Series B

FIG. 1

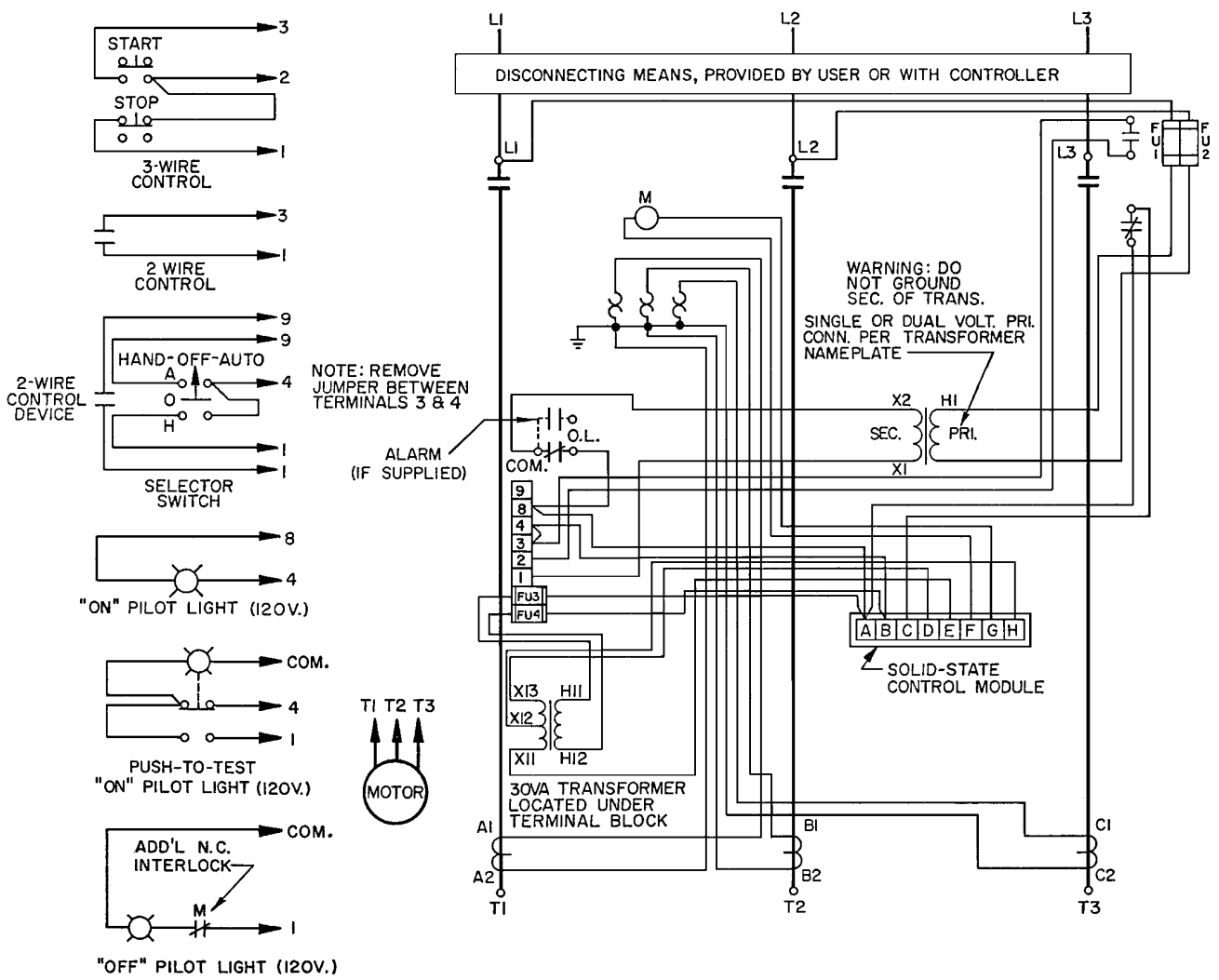

Wiring Diagram

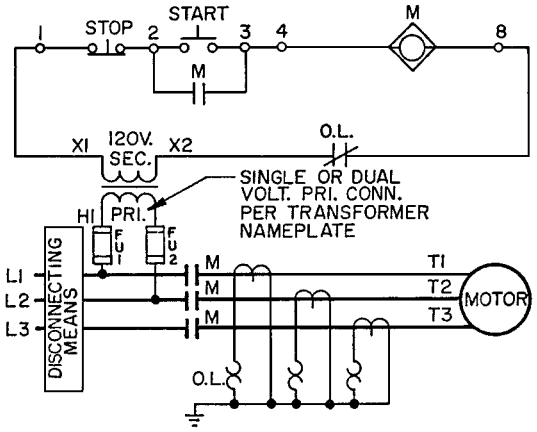

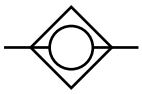

This symbol denotes the coil function, provided by a solid-state control module, 30 VA transformer, two fuses in the secondary of the transformer, N.C. electrical interlock and DC magnet coil.

Elementary Diagram

3-Pole, 3-Phase Magnetic Starters, Size 7 – Common Control
Class 8536 Type SJ Series A

FIG. 1

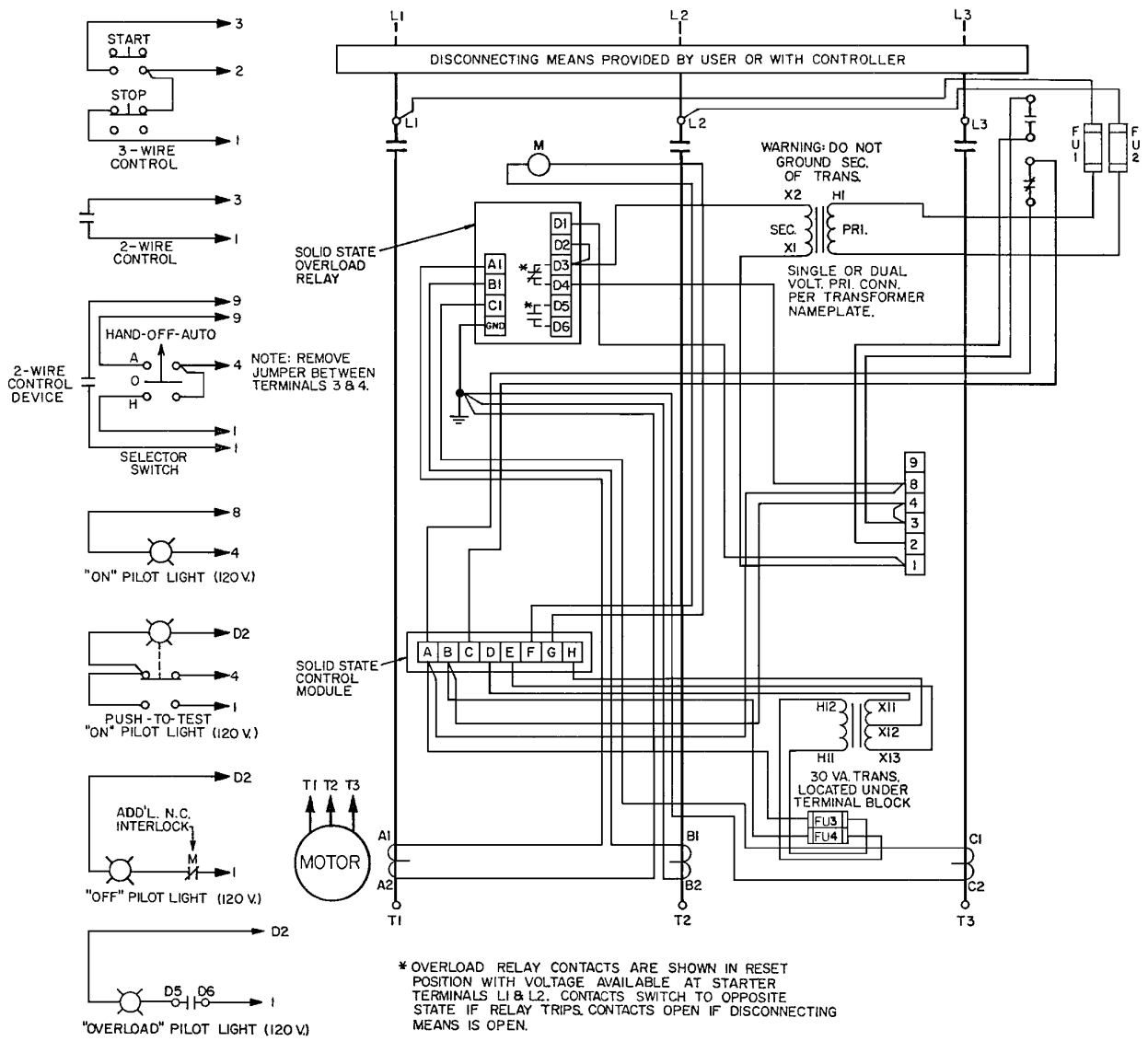

Wiring Diagram

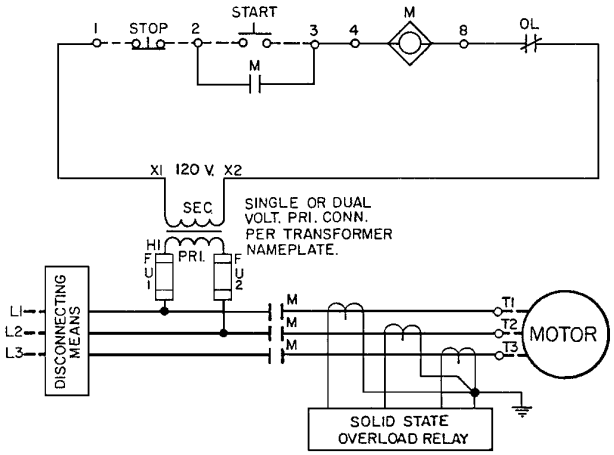

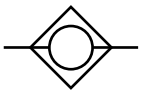

This symbol denotes the coil function, provided by a solid-state control module, 30 VA transformer, two fuses in the secondary of the transformer, N.C. electrical interlock and DC magnet coil.

Elementary Diagram

We Respond.®

3-Pole, 3-Phase Magnetic Starters, Size 00 to 4: Class 8536 Type S

FIG. 1

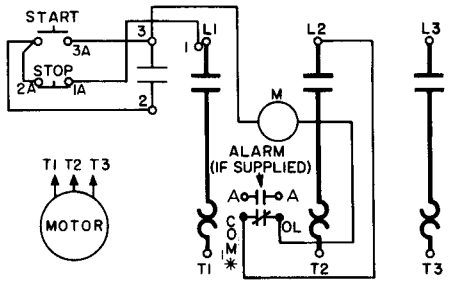

Wiring Diagram

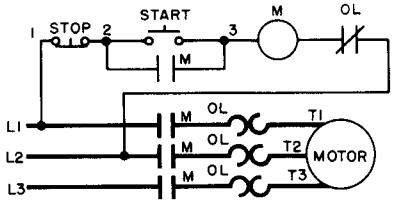

Elementary Diagram

Form A – Start-Stop Push Button Mounted in Cover

FIG. 2

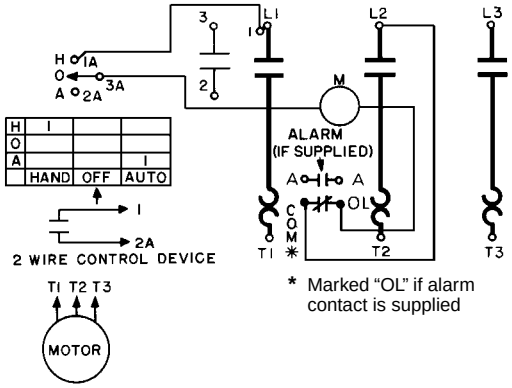

Wiring Diagram

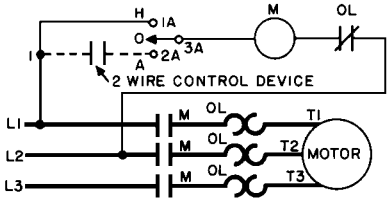

Elementary Diagram

Form C – Hand-Off-Auto Selector Switch Mounted in Cover

FIG. 3

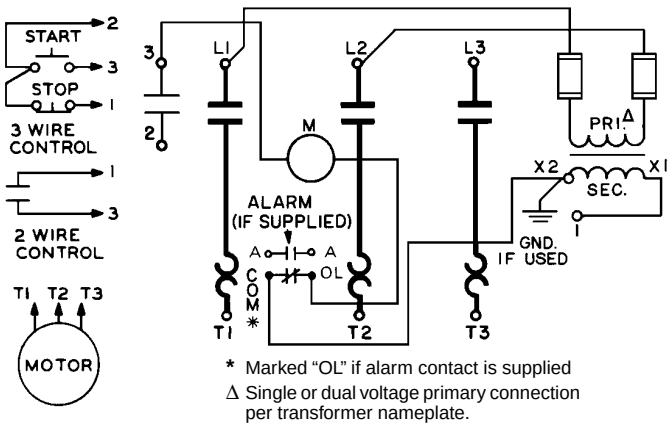

Wiring Diagram

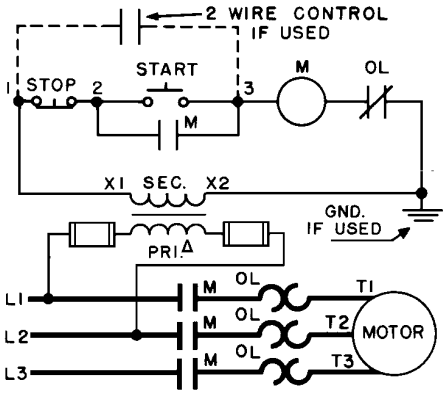

Elementary Diagram

Form F4T – Control Circuit Transformer and Primary Fuses

3-Pole, 3-Phase Magnetic Starters, Size 00 to 4: Class 8536 Type S

FIG. 1

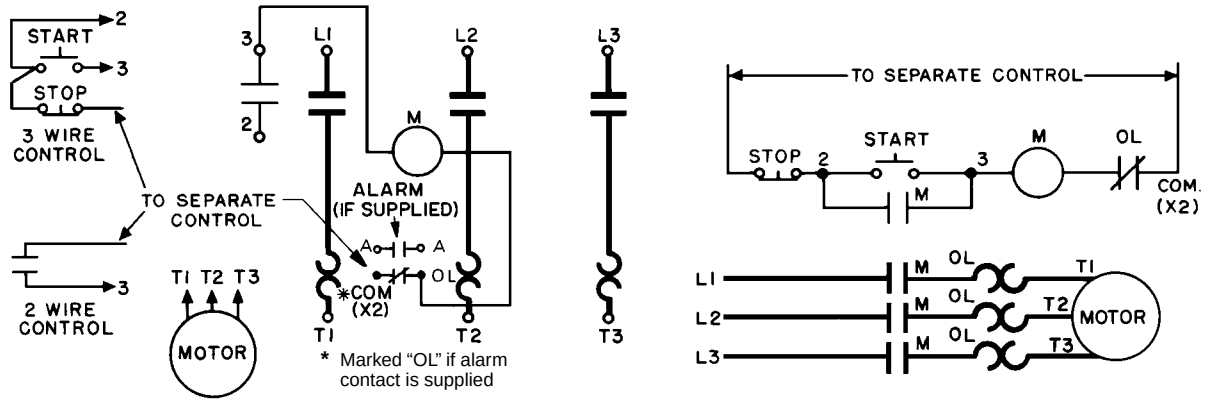

* Marked "OL" if alarm contact is supplied

Wiring Diagram — Elementary Diagram

Form S – Separate Control

FIG. 2

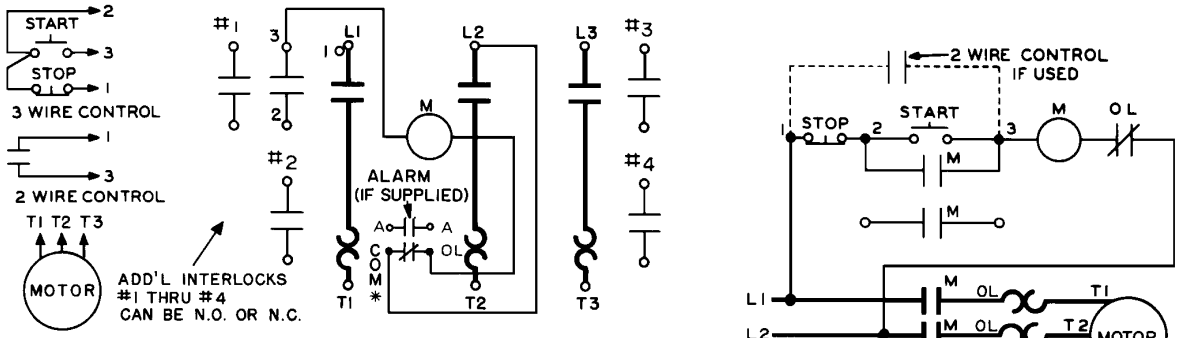

* Marked "OL" if alarm contact is supplied

On NEMA Size 3 and 4 starters, holding circuit contact is in position #1. Max. of 3 external auxiliary contacts on NEMA Size 00.

Wiring Diagram — Elementary Diagram

Form X – Additional Auxiliary Contacts

3-Pole, 3-Phase Magnetic Starters, Size 5: Class 8536 Type S

FIG. 3

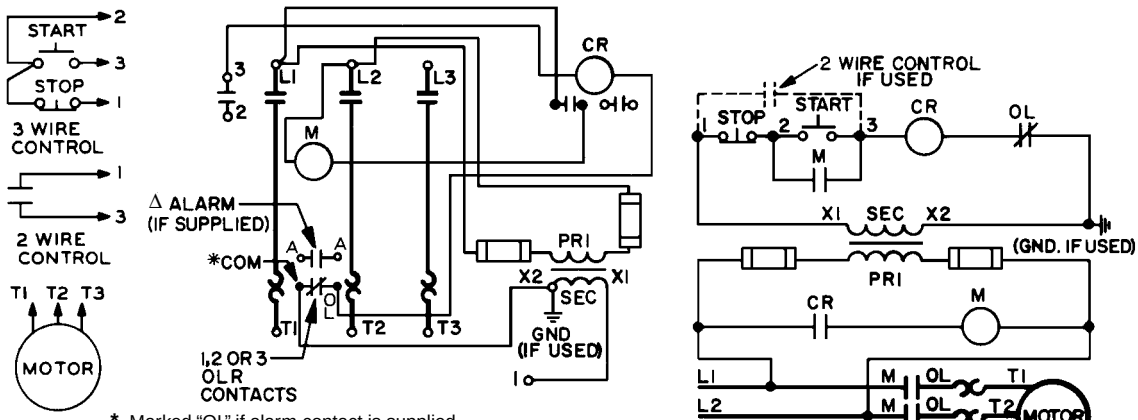

* Marked "OL" if alarm contact is supplied

Δ If alarm contact is supplied, a single (3 thermal unit) overload block is furnished, fed from 3 current transformers

Wiring Diagram — Elementary Diagram

Form F4T – Control Circuit Transformer and Primary Fuses

We Respond.®

3-Pole, 3-Phase Magnetic Starters, Size 6 – Separate Control
Class 8536/8538/8539 Type SH Form S Series B

FIG. 1

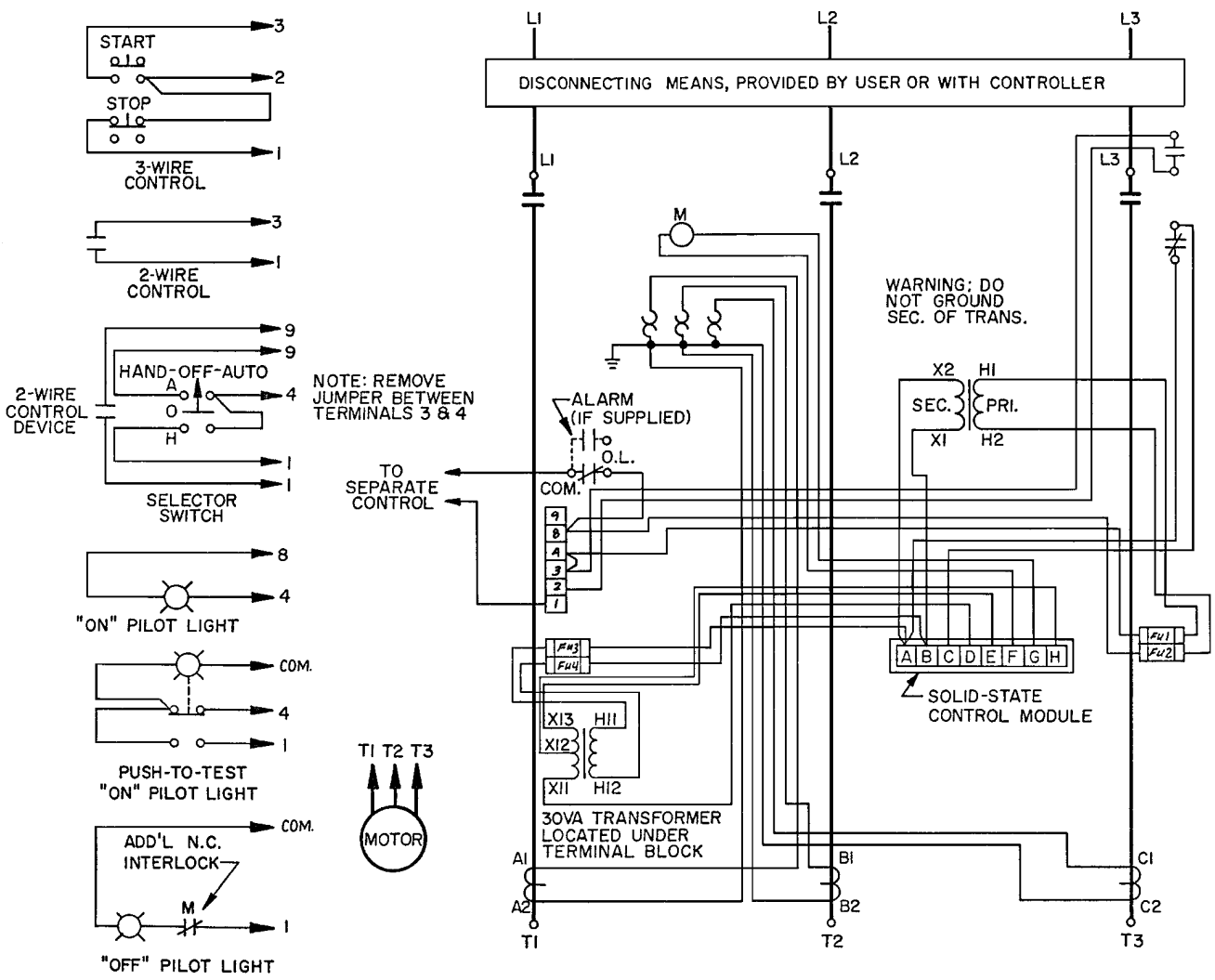

Wiring Diagram

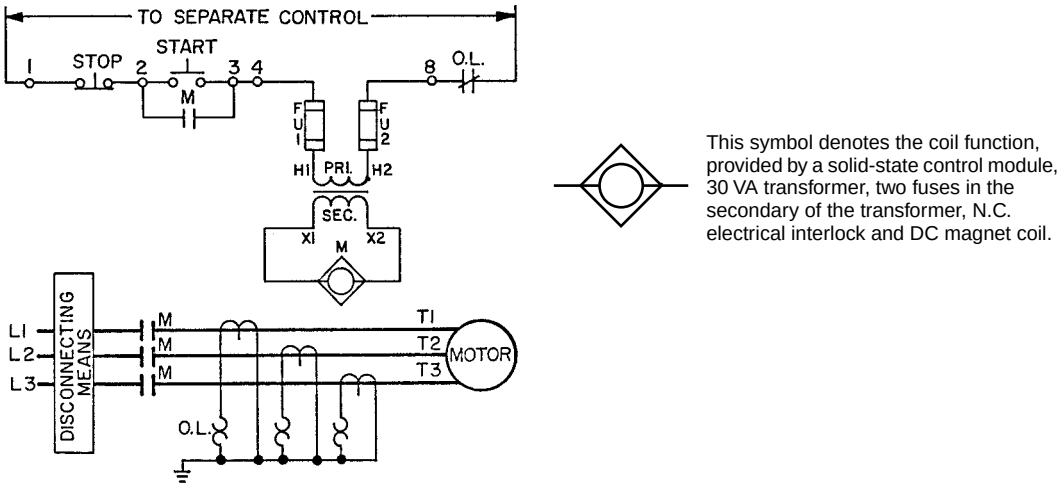

Elementary Diagram

3-Pole, 3-Phase Magnetic Starters, Size 7 – Separate Control
Class 8536 Type SJ Form S Series A

FIG. 1

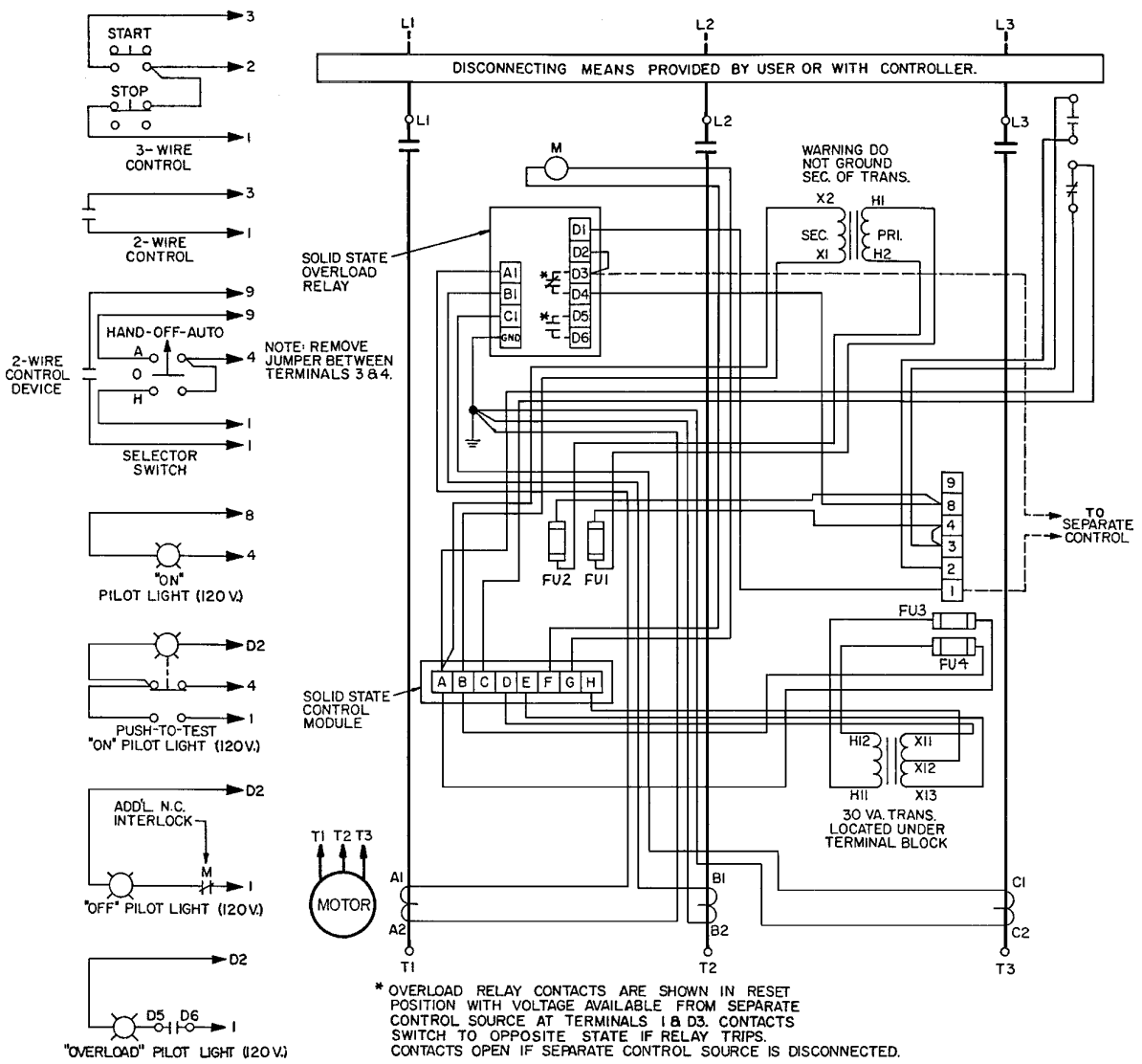

Wiring Diagram

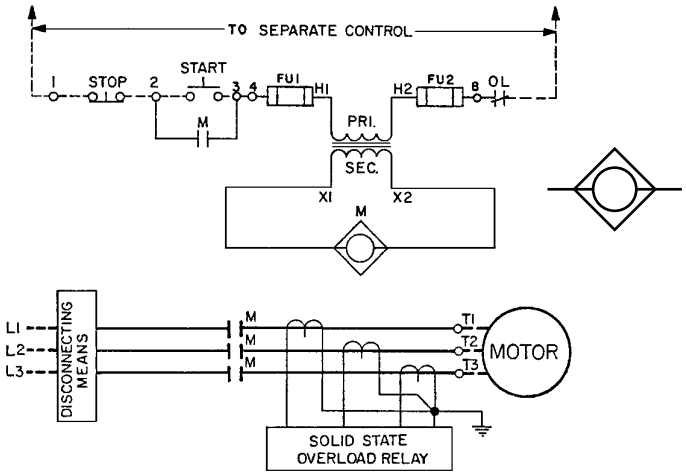

This symbol denotes the coil function, provided by a solid-state control module, 30 VA transformer, two fuses in the secondary of the transformer, N.C. electrical interlock and DC magnet coil.

Elementary Diagram

We Respond.

State of Auxiliary Contacts for LD1

FIG. 1

LD1

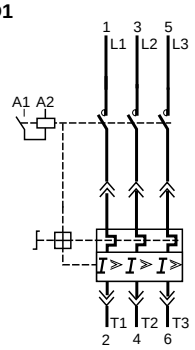

□ Contact open
■ Contact closed

Auxiliary contact actuators

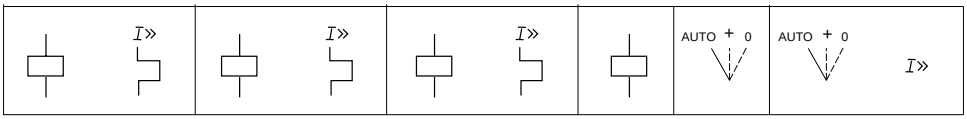

Auxiliary contacts

		LA1-LB015		LA1-LB017		LA1-LB019		LA1-LB001	LA1-LB031	LA1-LB034	
		13 23 31 / 14 24 32	95 97 / 96 98	13 31 / 14 32	97 / 98	13 31 / 14 32	95 / 96	41 / 42	16 18 / 15 17	16 18 / 15 17	6 8 / 5 7
Off	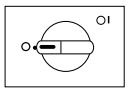	□□■	■□	□■	□	□■	■	■	□□	□□	■□
On, contactor open		□□■	■□	□■	□	□■	■	■	■■	■■	■□
On, contactor closed	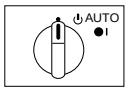	■■□	■□	■□	□	■□	■	□	■■	■■	■□
Tripped on overload		□□■	□■	□■	■	□■	□	■	□□	□□	■□
Tripped on short circuit	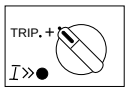	□□■	□■	□■	■	□■	□	□	□□	□□	□■
Off after short circuit	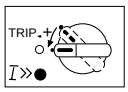	□□■	□■	□■	■	□■	□	□	□□	□□	□■
Manual reset		□□■	■□	□■	□	□■	■	□	□□	□□	■□

Telemecanique

State of Auxiliary Contacts for LD5

FIG. 1 **LD5**

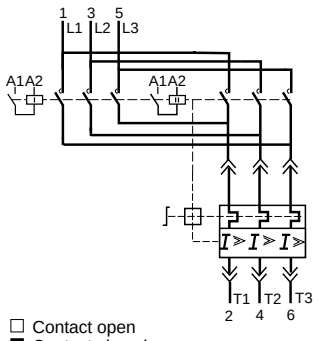

☐ Contact open
■ Contact closed

Auxiliary contact actuators

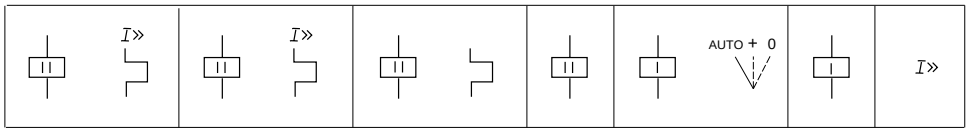

Auxiliary contacts

	LA1-LB015		LA1-LB017		LA1-LB019		LA1-LB001	LA1-LB021		LA1-LB001	On Integral
	13 23 31 / 14 24 32	95 97 / 96 98	13 31 / 14 32	97 / 98	13 31 / 14 32	95 / 96	41 / 42	13 23 31 / 14 24 32	16 18 / 15 17	41 / 42	6 8 / 5 7
Off	☐☐■	■☐	☐■	☐	☐■	■	■	☐☐■	☐☐	■	■☐
On, contactor open	■☐☐	■☐	☐■	☐	☐■	■	■	☐☐■	■	■	■☐
On, contactor II closed	■■☐	■☐	■☐	☐	■☐	■	☐	☐☐■	■	■	■☐
On, contactor I closed	☐☐■	■☐	☐■	☐	☐■	■	■	■■☐	■	☐	■☐
Tripped on overload	☐☐■	☐■	☐■	■	☐■	☐	■	☐☐■	☐☐	■	■☐
Tripped on short circuit	☐☐■	☐■	☐■	■	☐■	☐	■	☐☐■	☐☐	■	☐■
Off after short circuit	☐☐■	☐■	☐■	■	☐■	☐	☐	☐☐■	☐☐	■	☐■
Manual reset	☐☐■	■☐	☐■	☐	☐■	■	☐	☐☐■	☐☐	■	■☐

We Respond.

State of Auxiliary Contacts for LD4

FIG. 1

LD4

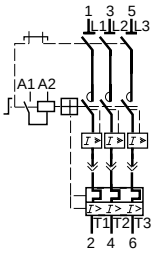

Auxiliary contact actuators

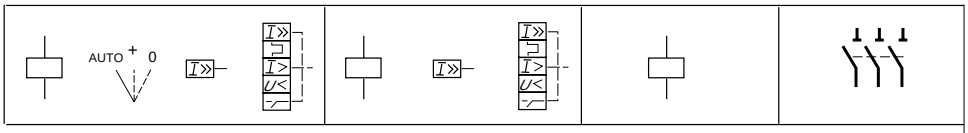

Auxiliary contacts

	LA1-LC010				LA1-LC012			LA1-LC020	LA1-LC030
	13 23 31 14 24 32	16 18 15	06 08 05	96 98 95	13 23 31 14 24 32	08 05	98 95	13 23 31 14 24 32	(63) 53 54 (64)
LD4									
Off + isolation	13 23 31 □□■ 14 24 32	16 18 □■ 15	06 08 ■□ 05	96 98 ■□ 95	13 23 31 □□■ 14 24 32	08 □ 05	98 □ 95	13 23 31 □□■ 14 24 32	53 □ 54
Off	13 23 31 □□■ 14 24 32	16 18 □■ 15	06 08 ■□ 05	96 98 ■□ 95	13 23 31 □□■ 14 24 32	08 □ 05	98 □ 95	13 23 31 □□■ 14 24 32	53 ■ 54
On, contactor open	13 23 31 □□■ 14 24 32	16 18 ■□ 15	06 08 ■□ 05	96 98 ■□ 95	13 23 31 □□■ 14 24 32	08 □ 05	98 □ 95	13 23 31 □□■ 14 24 32	53 ■ 54
On, contactor closed	13 23 31 ■■□ 14 24 32	16 18 ■□ 15	06 08 ■□ 05	96 98 ■□ 95	13 23 31 ■■□ 14 24 32	08 □ 05	98 □ 95	13 23 31 ■■□ 14 24 32	53 ■ 54
Tripped, on overload	13 23 31 □□■ 14 24 32	16 18 □■ 15	06 08 ■□ 05	96 98 □■ 95	13 23 31 □□■ 14 24 32	08 □ 05	98 ■ 95	13 23 31 □□■ 14 24 32	53 ■ 54
Off, after overload	13 23 31 □□■ 14 24 32	16 18 □■ 15	06 08 ■□ 05	96 98 ■□ 95	13 23 31 □□■ 14 24 32	08 □ 05	98 □ 95	13 23 31 □□■ 14 24 32	53 ■ 54
Tripped, on short circuit	13 23 31 □□■ 14 24 32	16 18 □■ 15	06 08 □■ 05	96 98 □■ 95	13 23 31 □□■ 14 24 32	08 ■ 05	98 ■ 95	13 23 31 □□■ 14 24 32	53 ■ 54
Off, after short circuit	13 23 31 □□■ 14 24 32	16 18 □■ 15	06 08 □■ 05	96 98 ■□ 95	13 23 31 □□■ 14 24 32	08 ■ 05	98 □ 95	13 23 31 □□■ 14 24 32	53 ■ 54
Manual reset	13 23 31 □□■ 14 24 32	16 18 □■ 15	06 08 ■□ 05	96 98 ■□ 95	13 23 31 □□■ 14 24 32	08 □ 05	98 □ 95	13 23 31 □□■ 14 24 32	53 ■ 54

□ Contact open
■ Contact closed

State of Auxiliary Contacts for LD5

FIG. 1

LD5

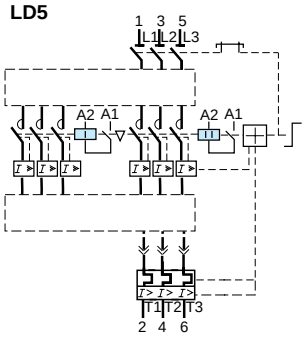

□ Contact open
■ Contact closed

Auxiliary contact actuators

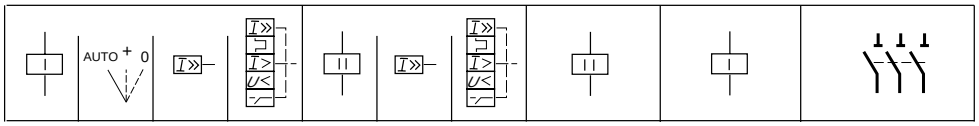

Auxiliary contacts

	LA1-LC010				LA1-LC012			LA1-LC020	LA1-LC021	LA1-LC031
	13 23 31 14 24 32	16 18 15	06 08 05	96 98 95	13 23 31 14 24 32	08 05	98 95	13 23 31 14 24 32	13 23 31 14 24 32	53 63 54 64
Off + isolation	○	○	●	●	○	○	○	○	○	○
Off	○	○	●	●	○	○	○	○	○	●
On, both contactors open	○	●	●	●	○	○	○	○	○	●
On, contactor open	○	●	●	●	○	○	○	○	●	●
On, contactor closed	●	●	●	●	●	○	○	●	○	●
Tripped on overload	○	●	●	○	○	○	●	○	○	●
Off, after overload	○	●	●	●	○	○	○	○	○	●
Tripped on short circuit	○	●	○	●	○	●	●	○	○	●
Off after short circuit	○	●	○	●	○	●	○	○	○	●
Manual reset	○	●	●	●	○	○	○	○	○	●

Integral 18

FIG. 1

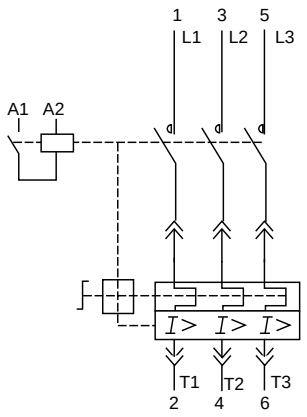

Self-Protected Starter w/ Protection Module LB•
Integral 18 LD1 L80

FIG. 2

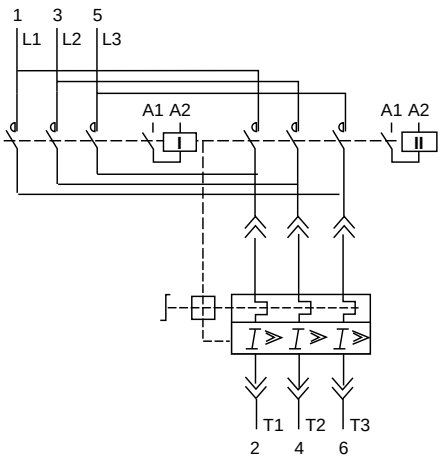

Self-Protected Reversing Starter w/ Protection Module LB•
Integral 18 LD5 LB130 + LB1 LB03P

Integral 32

FIG. 3

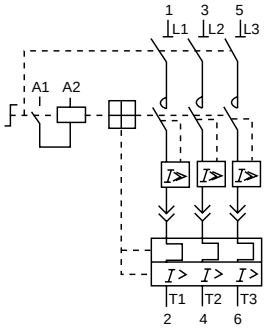

Starter w/ Isolator
Integral 32 LD4

FIG. 4

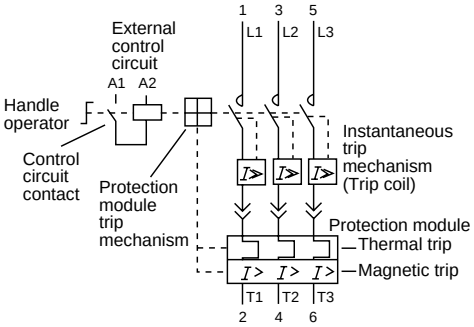

Starter w/o Isolator
Integral 32 LD1

FIG. 5

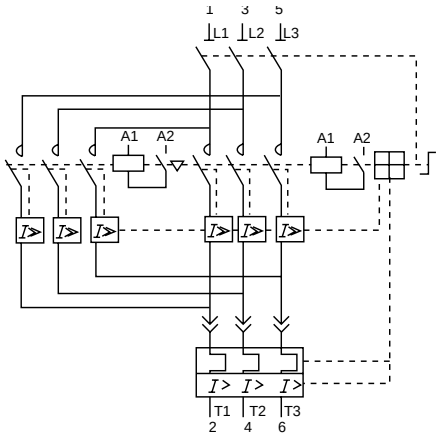

Reversing Starter w/ Isolator
Integral 32 LD5

Protection Modules: LB•

FIG. 6

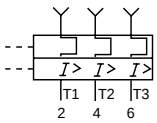

Thermal and Magnetic Trip
LB1

FIG. 7

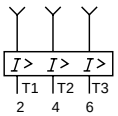

Magnetic Trip Only
LB6

Auxiliary Contact Blocks

FIG. 1

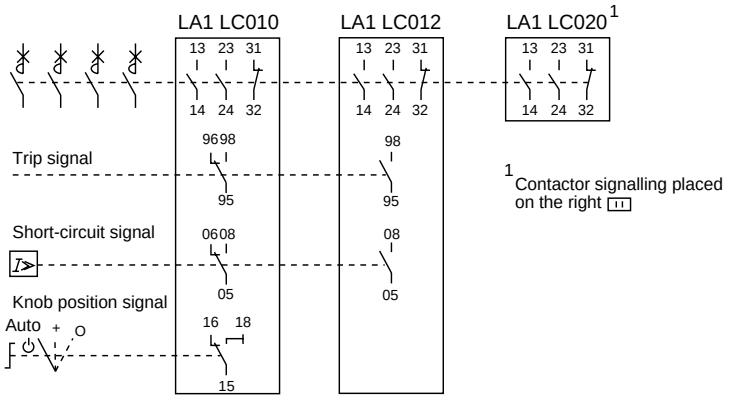

For LD1 or LD4 and reverser LD5 (mounted on right)
LA1 LC010, LA1 LC012 and LA1 LC020

FIG. 2

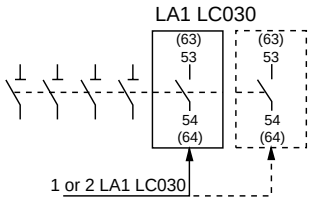

For LD4 w/ isolating contacts
(mounted on left)
LA1 LC030

FIG. 3

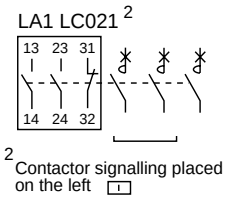

For reversing LD5
(mounted on left)
LA1 LC021

FIG. 4

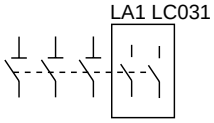

Isolating contacts
(mounted on left)
LA1 LC031

Remote Reset Units[1] for LD1, LD4 and LD5

FIG. 5

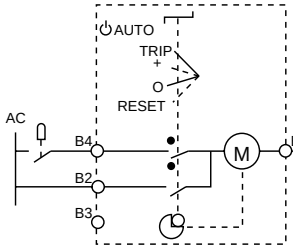

Use of the LA1 LC020 contact block prevents the mounting of trip or remote units

For starter and reverser already fitted with a block, LA1 LC010 or LA1 LC012.

LA1 LC052

Trip Units for LD1, LD4 and LD5

FIG. 6

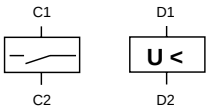

LA1 LC07••

Interface Modules

FIG. 7

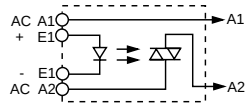

LA1 LC180, LA1 LD180

FIG. 8

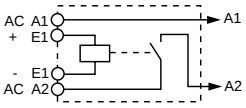

LA1 LC580, LA1 LD580

Add-on Blocks: LA1 LB0••

FIG. 1

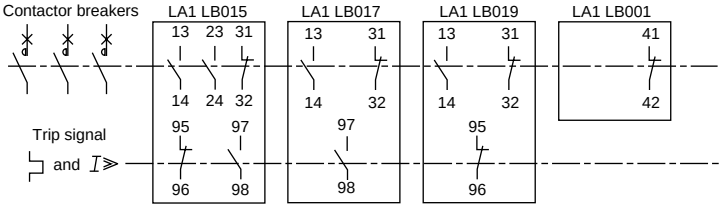

For LD1 (mounted on right)

FIG. 2

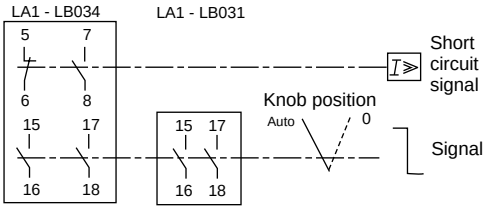

For LD1 (mounted on left)

FIG. 3

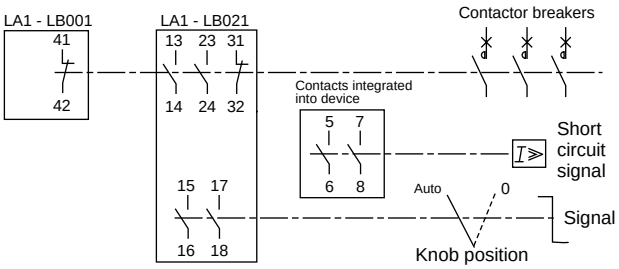

For LD5 (mounted on left)

Time Delay Modules

FIG. 4

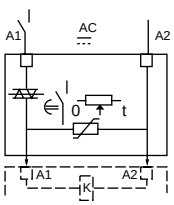

On Module
LA4 DT

FIG. 5

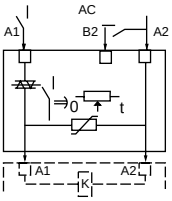

Off Module
LA4 DR

Control Module

FIG. 6

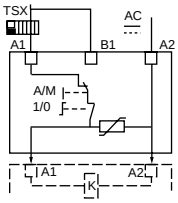

Auto-Man-Stop Module
LA4 DM

Interface Modules

FIG. 7

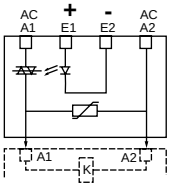

Solid State Module
LA4 DW

FIG. 8

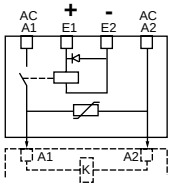

Relay Module
LA4 DF

FIG. 9

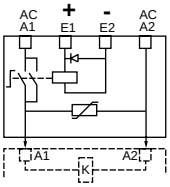

Relay Module w/ Manual Override
LA4 DL

Voltage Converters: LA1 LC080 and LA1 LD080

FIG. 10

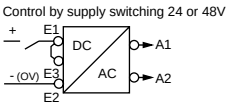

For 24 or 48 V Supply

FIG. 11

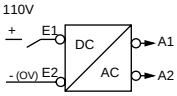

For 110 V Supply

FIG. 12

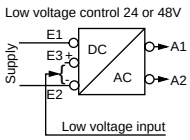

For 24 or 48 V Supply w/ Low Voltage Input

3-Pole, 3-Phase Combination Starters: Class 8538 and 8539 Type S

FIG. 1

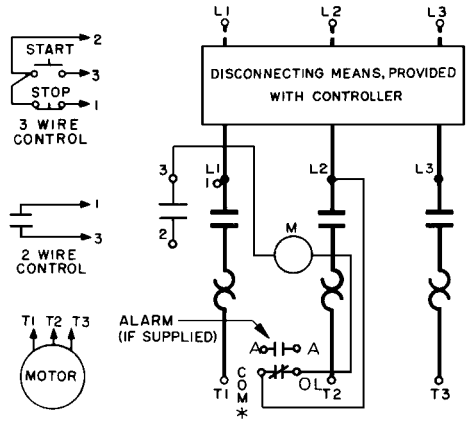

* Marked "OL" if alarm contact is supplied

Wiring Diagram

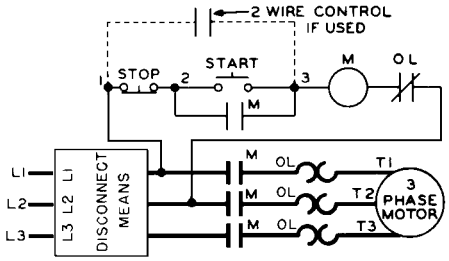

Elementary Diagram

Size 0-4

FIG. 2

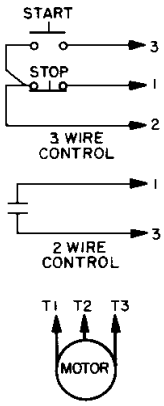

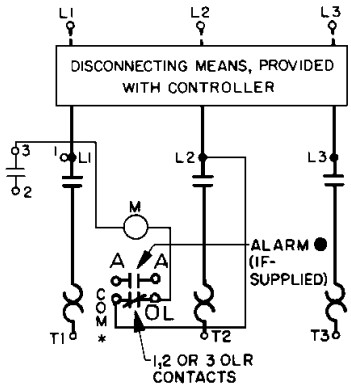

* Marked "OL" if alarm contact is supplied

Wiring Diagram

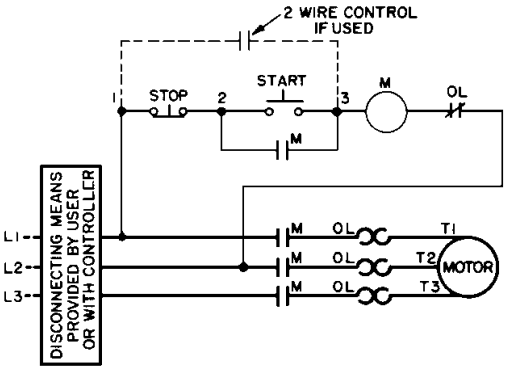

Elementary Diagram

Size 5

We Respond.®

3-Pole, 3-Phase Combination Starters w/ Control Circuit Transformer and Primary Fuses: Class 8538 and 8539 Type S Form F4T

FIG. 1

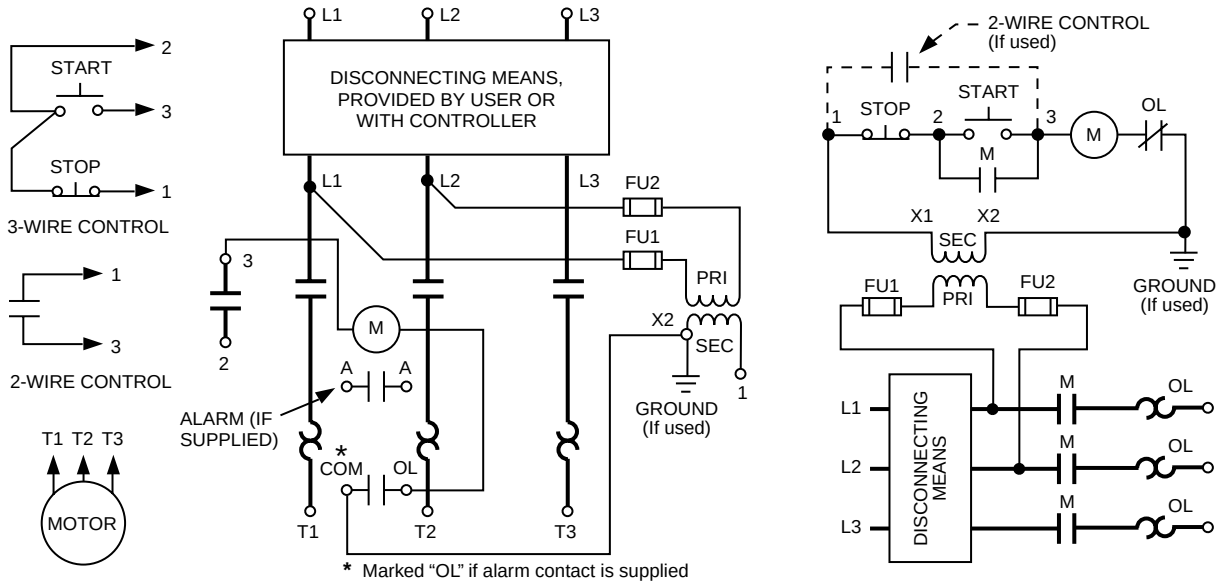

Wiring Diagram — Elementary Diagram

Size 0-4

FIG. 2

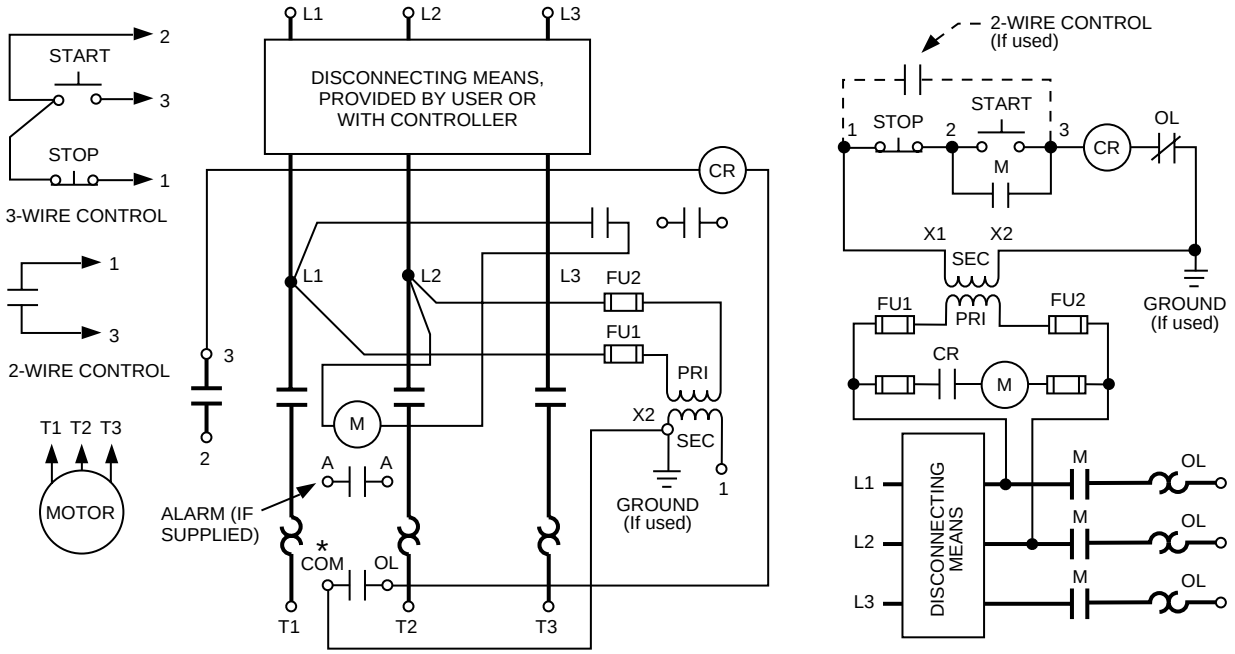

Wiring Diagram — Elementary Diagram

Size 5

Reduced Voltage Autotransformer Controllers w/ Closed Transition Starting: Class 8606 Size 2-5

FIG. 1

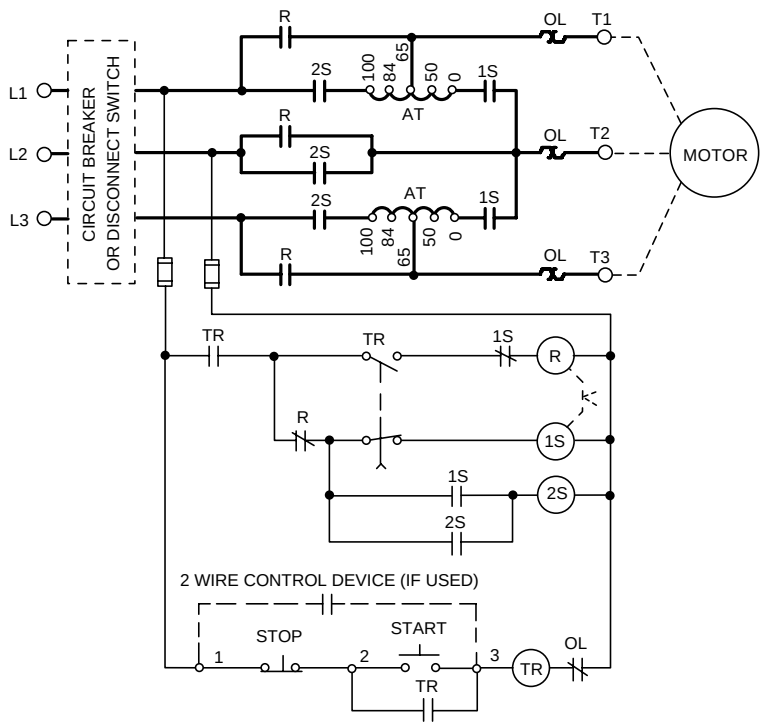

Reduced Voltage Autotransformer Controller w/ Closed Transition Starting: Class 8606 Size 6

FIG. 2

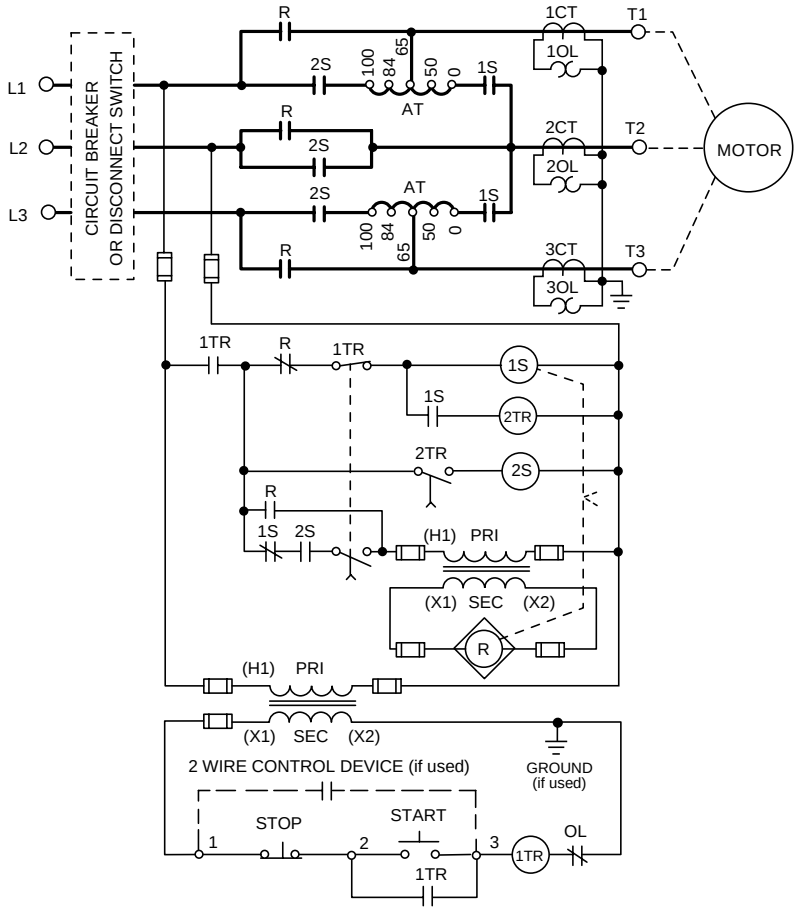

We Respond.®

Reduced Voltage Autotransformer Controllers w/ Closed Transition Starting: Class 8606 Size 7

FIG. 1

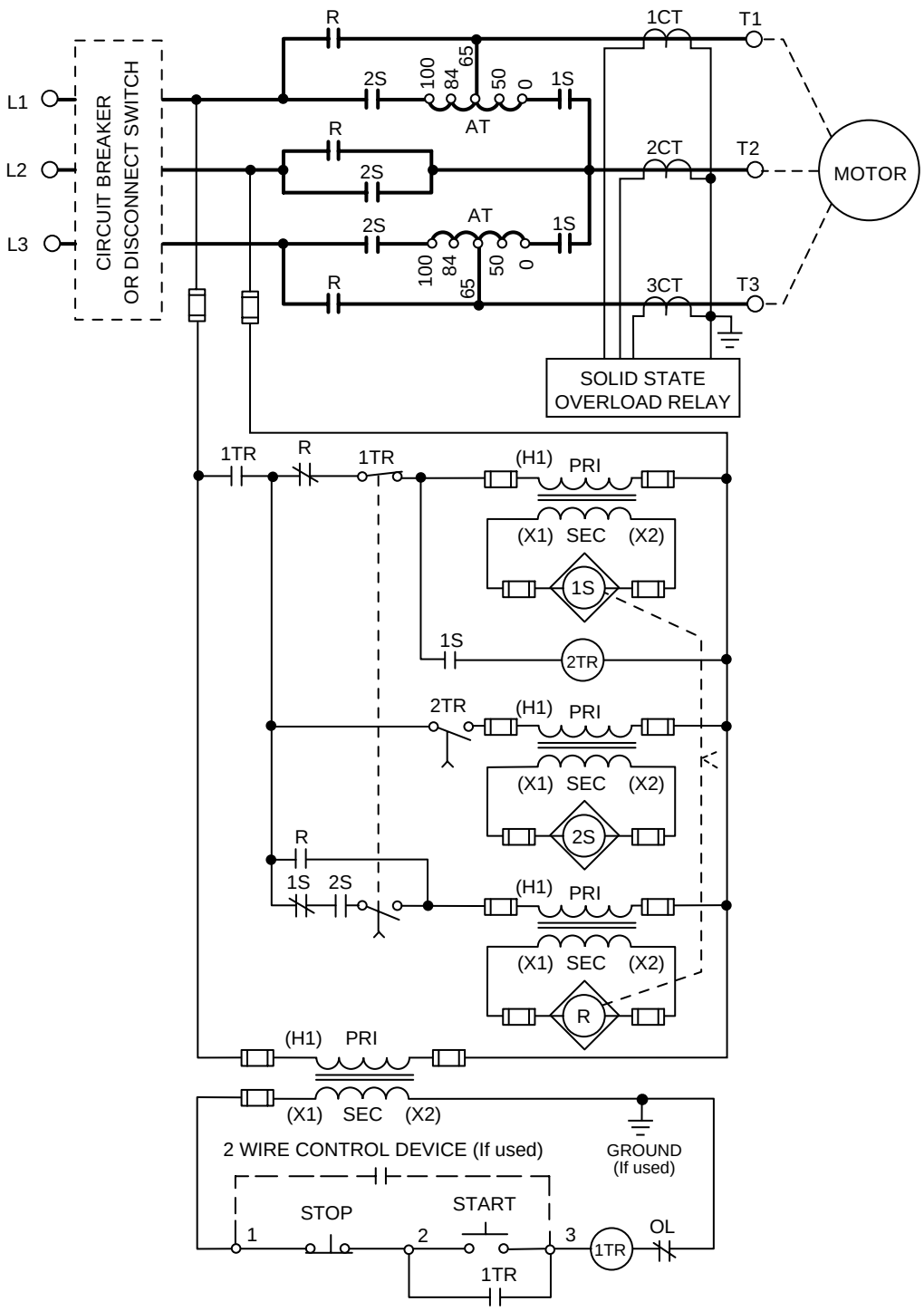

Wye-Delta Type Reduced Voltage Controllers, Size 1YΔ-5YΔ: Class 8630

FIG. 1

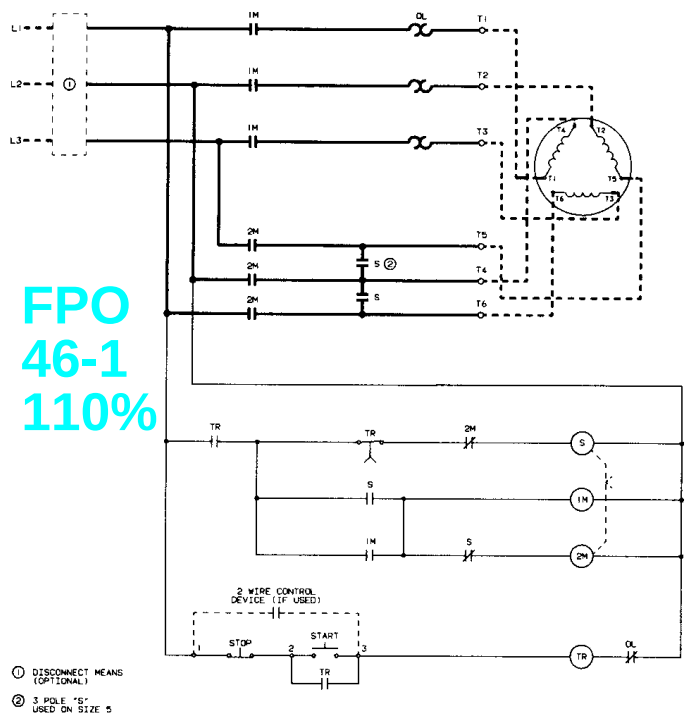

FPO 46-1 110%

Size 1YΔ-5YΔ Controllers with Open-Transition Starting

FIG. 2

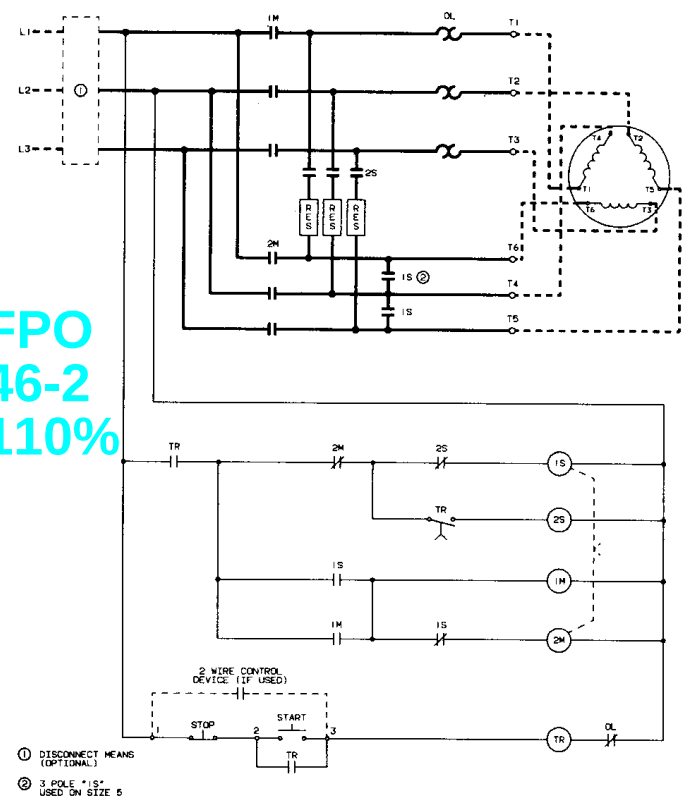

FPO 46-2 110%

Size 1YΔ-5YΔ Controllers with Closed-Transition Starting

We Respond.®

Wye-Delta Type Reduced Voltage Controllers, Size 6Y∆: Class 8630

FIG. 1

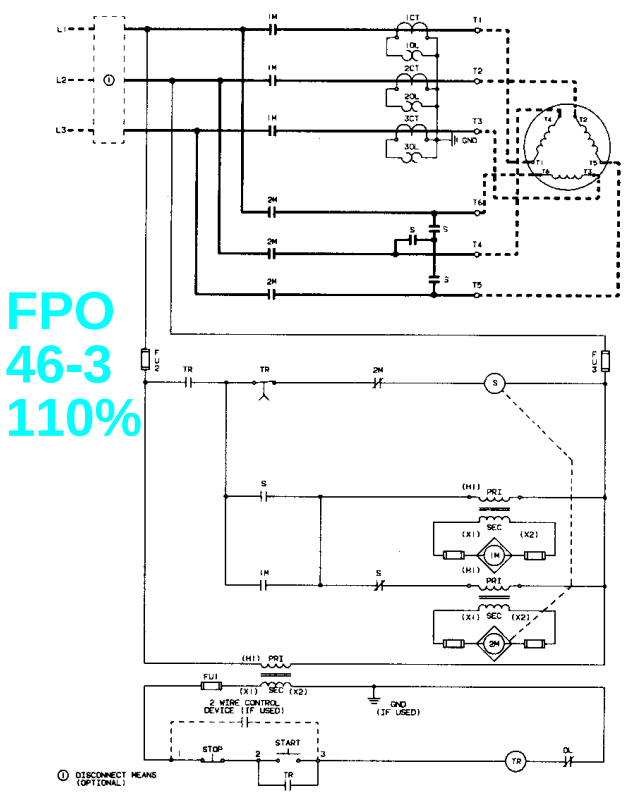

Size 6Y∆ Controller with Open-Transition Starting

FIG. 2

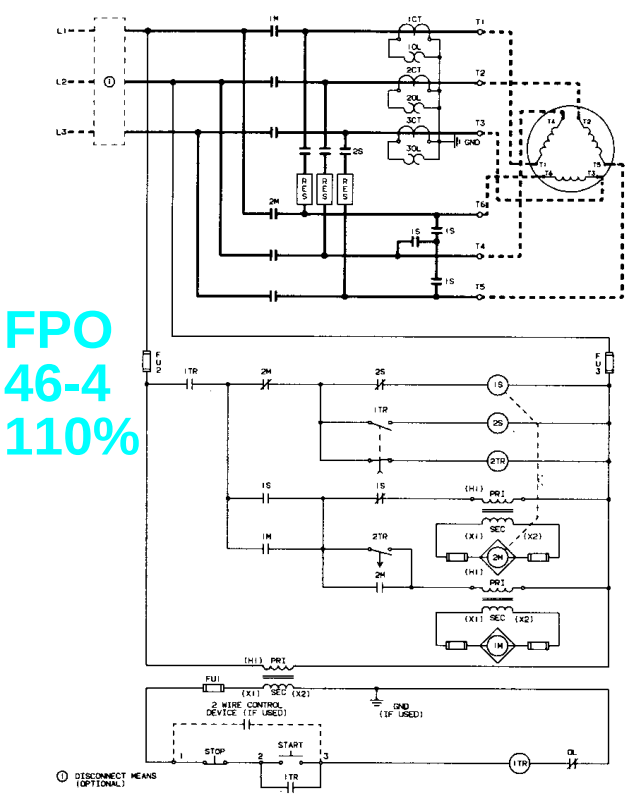

Size 6Y∆ Controller with Closed-Transition Starting

Table 5 Motor Lead Connections

Part Winding Schemes	Lettered Terminals in Panel						Part Winding Schemes	Lettered Terminals in Panel					
	A	B	C	D	E	F		A	B	C	D	E	F
1/2 Wye or Delta 6 Leads	T1	T2	T3	T7	T8	T9	2/3 Wye or Delta 6 Leads	T1	T2	T9	T7	T8	T3
1/2 Wye 9 Leads [1]	T1	T2	T3	T7	T8	T9	2/3 Wye 9 Leads [1]	T1	T2	T9	T7	T8	T3
1/2 Delta 9 Leads [2]	T1	T8	T3	T6	T2	T9	2/3 Delta 9 Leads [2]	T1	T4	T9	T6	T2	T3

[1] Connect terminals T4, T5 and T6 together at terminal box. [2] Connect terminals T4 and T8, T5 and T9, T6 and T7 together in 3 separate pairs at terminal box.

Part-Winding Reduced Voltage Controllers: Class 8640, Size 1PW-7PW

FIG. 1

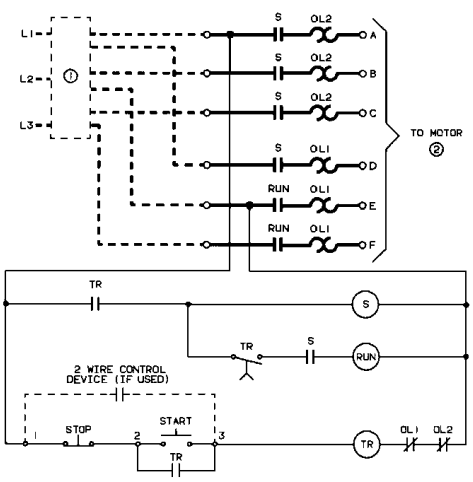

Size 1PW-4PW, 2-Step Part-Winding Controllers

FIG. 2

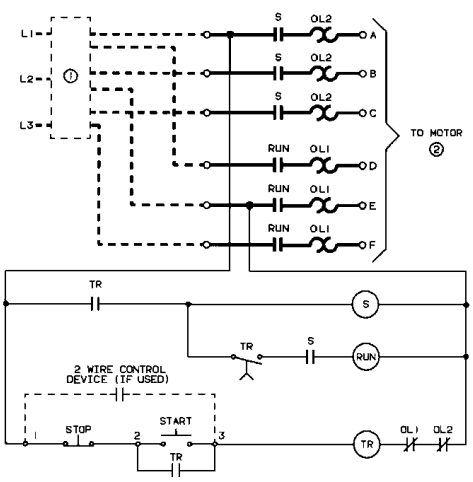

Size 5PW, 2-Step Part-Winding Controller

FIG. 3

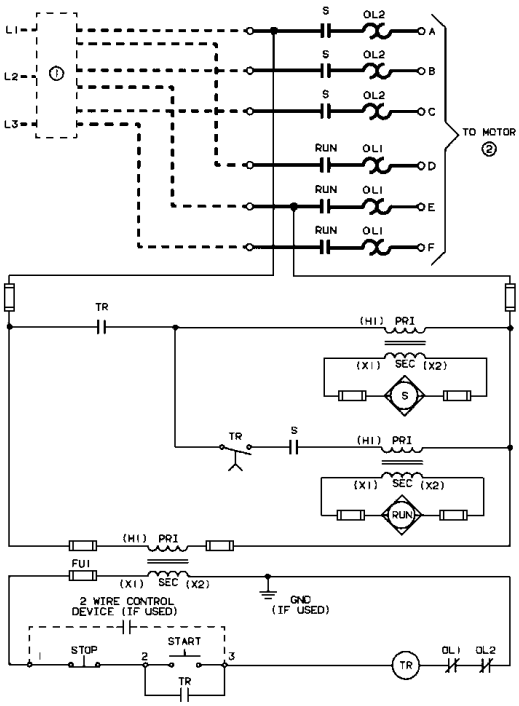

Size 6PW, 2-Step Part-Winding Controller

FIG. 4

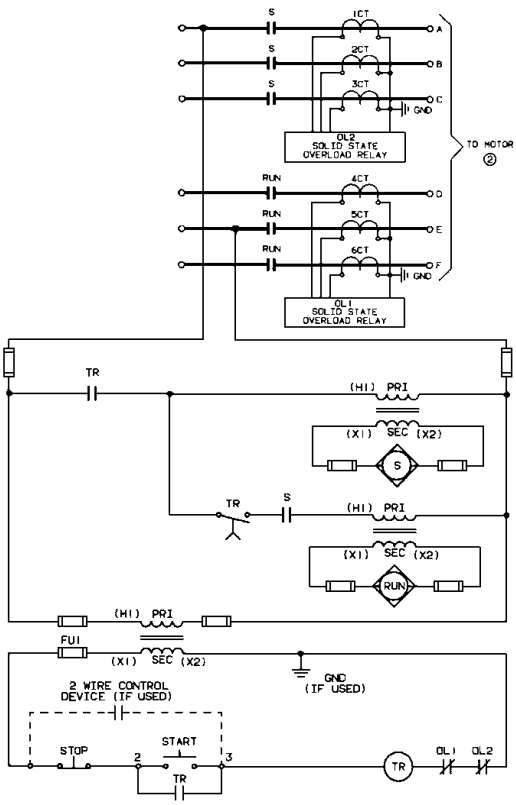

Size 7PW, 2-Step Part-Winding Controller

① Disconnect means (optional): 2 required, 1 for each motor winding. ② See Table 5 for motor lead connections.

We Respond.®

3-Phase Primary-Resistor Reduced Voltage Controllers: Class 8647, Size 1-7

FIG. 1

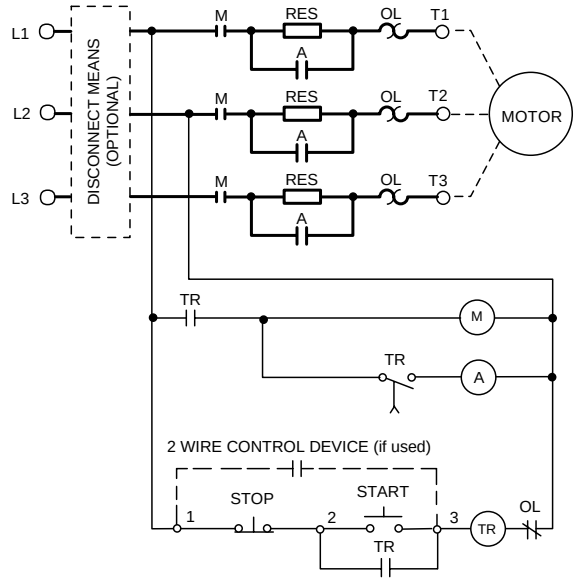

Size 1-4

FIG. 2

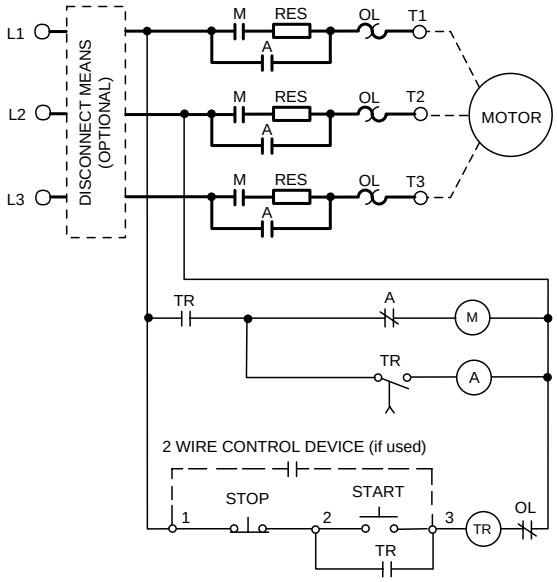

Size 5

FIG. 3

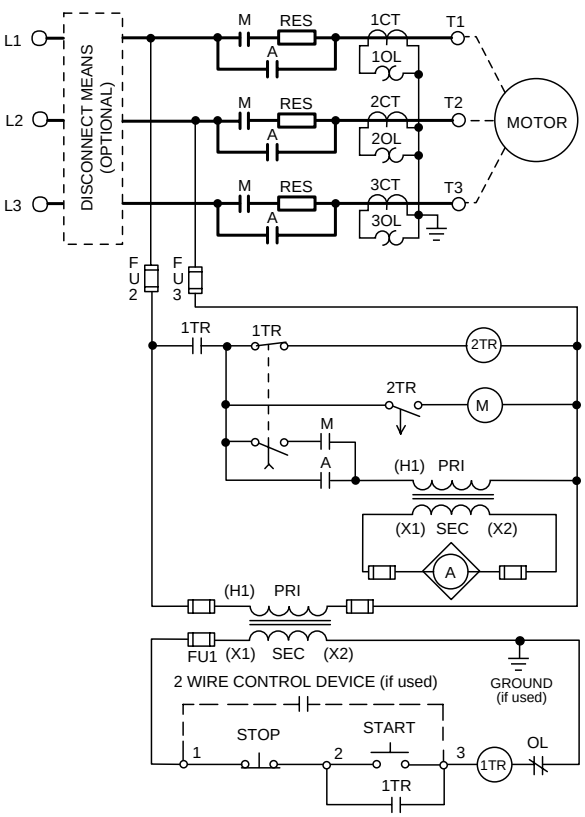

Size 6

FIG. 4

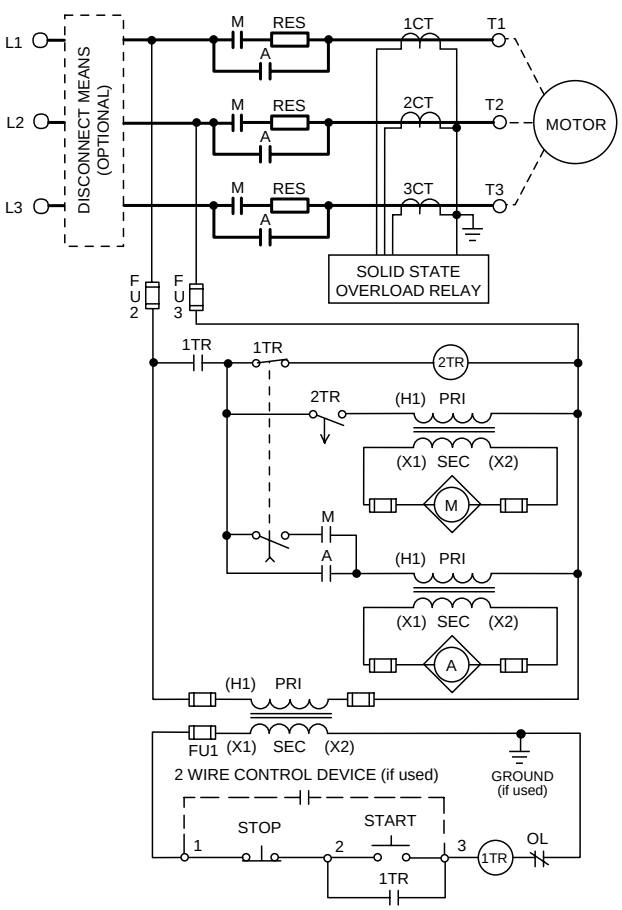

Size 7

Wound-Rotor Reduced Voltage Controllers: Class 8650 and 8651

FIG. 1

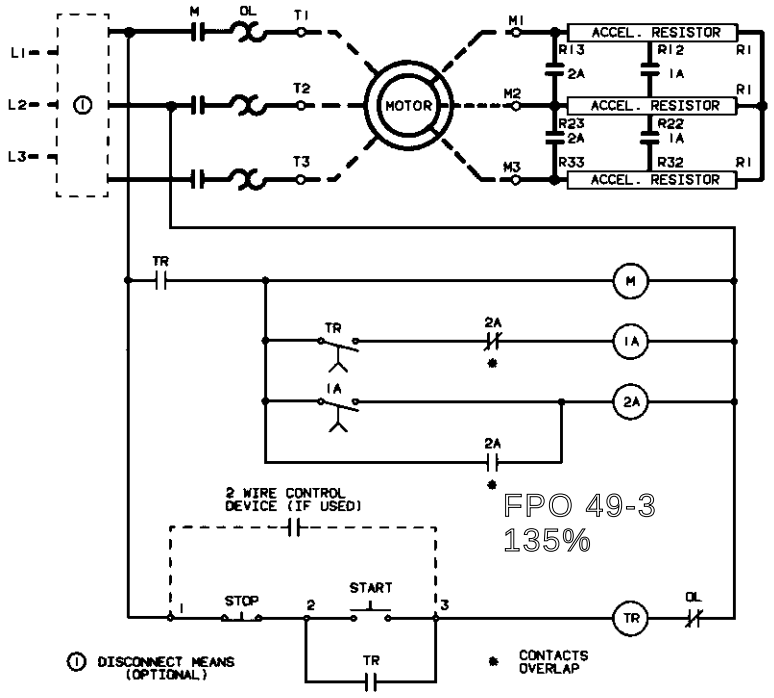

Non-Reversing Wound-Rotor Motor Controller w/ 3 Points of Acceleration
Class 8650

FIG. 2

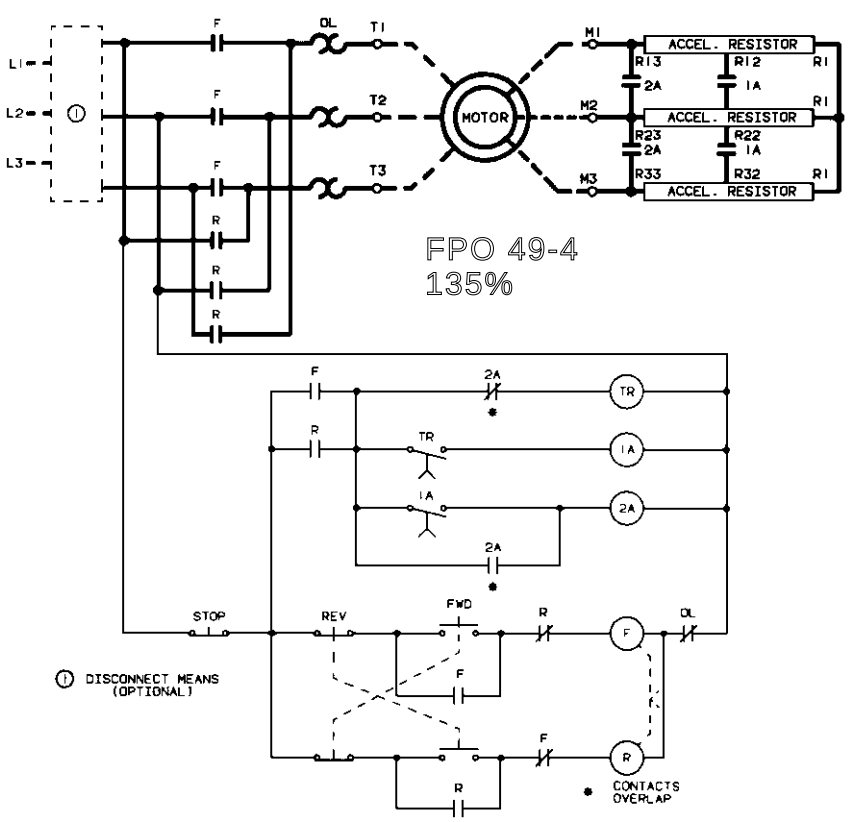

Reversing Wound-Rotor Motor Controller w/ 3 Points of Acceleration
Class 8651

We Respond.®

**ALPHA PAK® Solid State Reduced Voltage Starters:
Class 8660 Type MD-MG**

FIG. 1

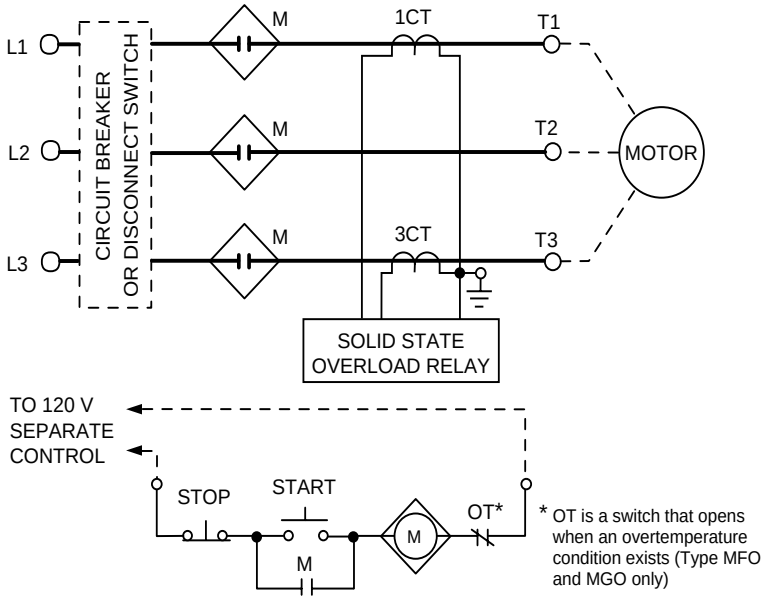

Type MD (16 A), ME (32 A), MF (64 A) and MG (128 A)

FIG. 2

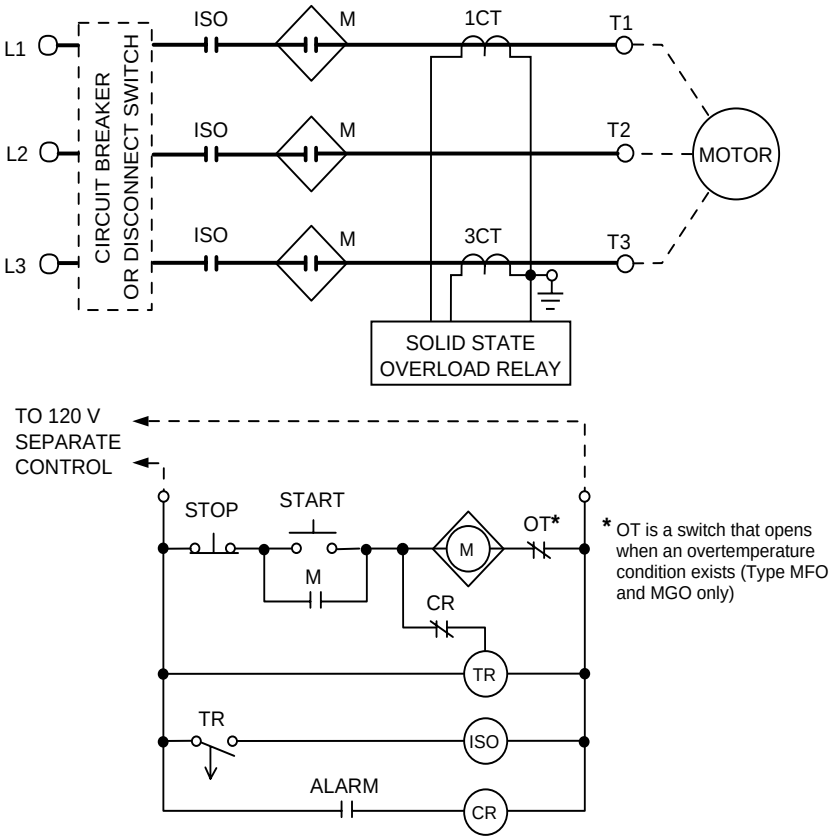

Type MD (16 A), ME (32 A), MF (64 A) and MG (128 A) w/ Isolation Contactor

Solid State Reduced Voltage Controllers: Class 8660 Type MH, MJ, MK and MM

FIG. 1

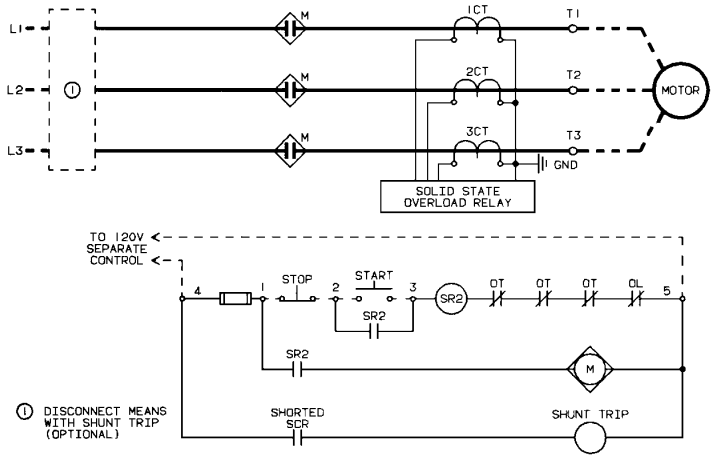

Type MH (200 A), MJ (320 A), MK (500 A) and MM (750 A)

FIG. 2

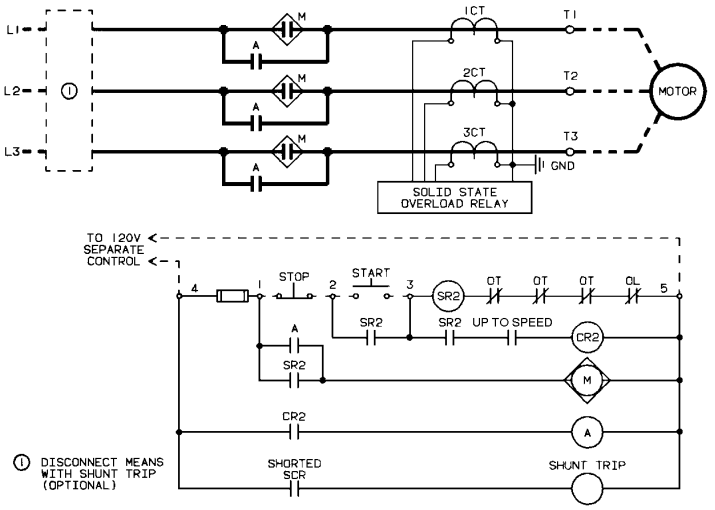

Type MH (200 A) w/ Shorting Contactor

FIG. 3

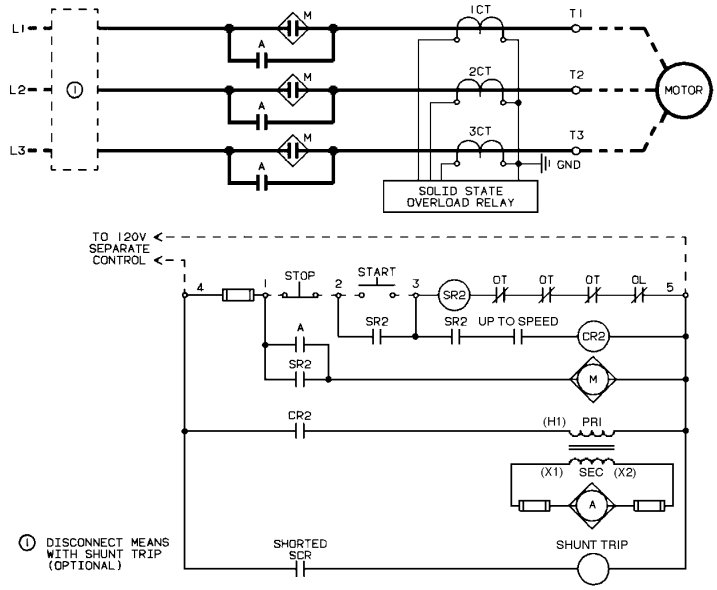

Type MJ (320 A), MK (500 A) and MM (750 A) w/ Shorting Contactor

We Respond.®

Solid State Reduced Voltage Controllers: Class 8660 Type MH, MJ, MK and MM

FIG. 1

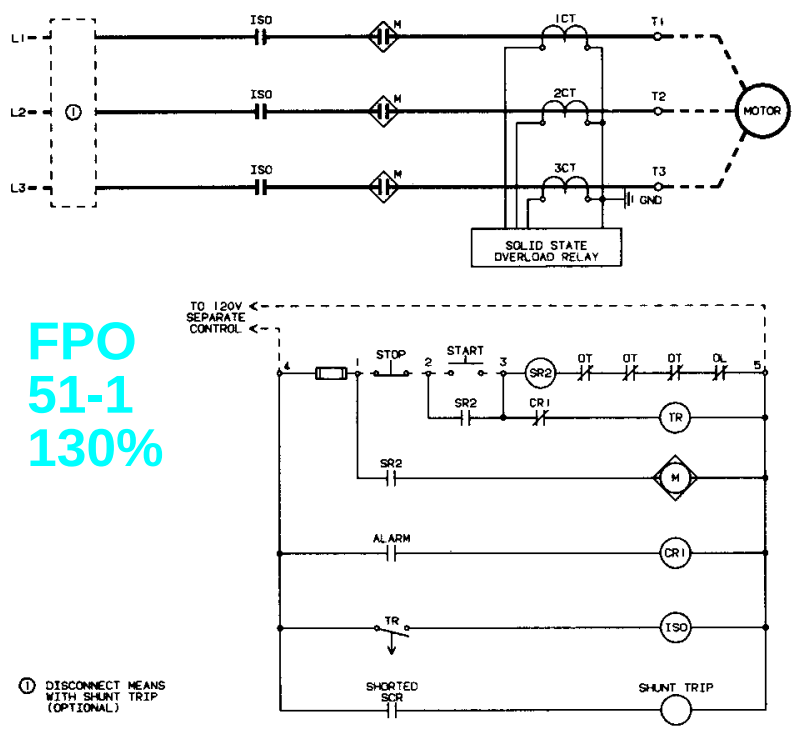

FPO
51-1
130%

Type MH (200 A) w/ Isolation Contactor

FIG. 2

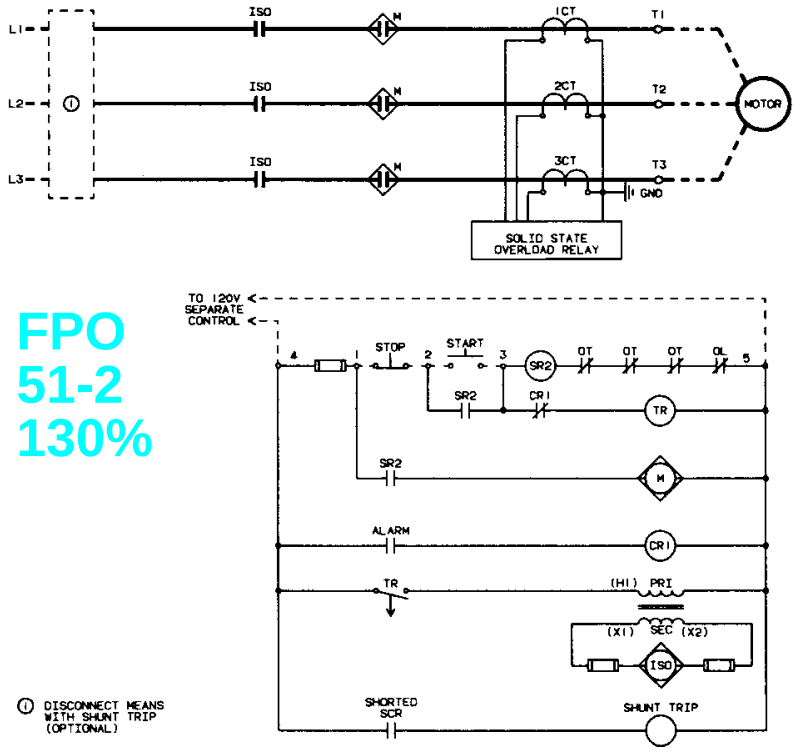

FPO
51-2
130%

Type MJ (320 A), MK (500 A) and MM (750 A) w/ Isolation Contactor

Solid State Reduced Voltage Controllers: Class 8660 Type MH, MJ, MK and MM

FIG. 1

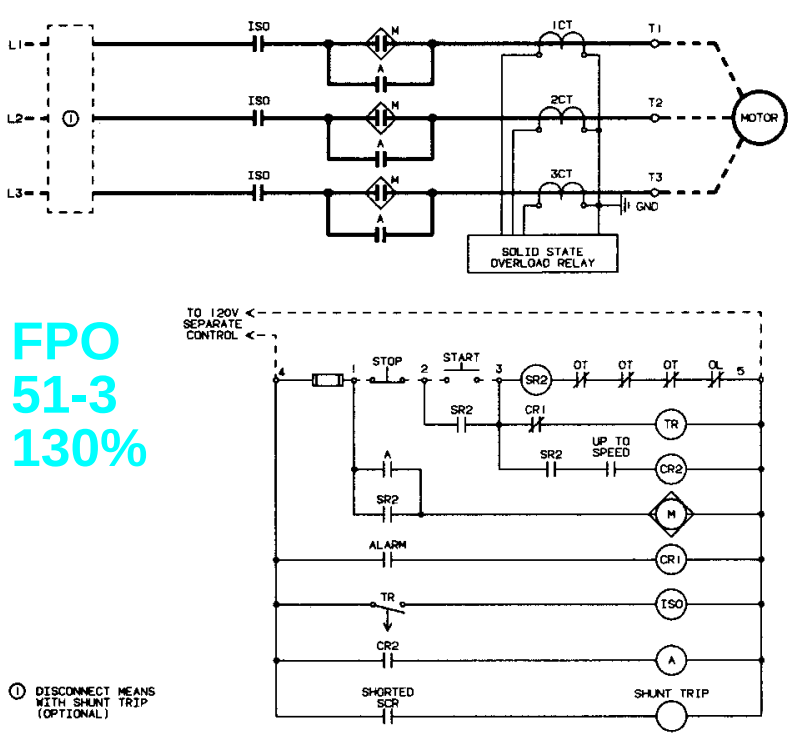

FPO
51-3
130%

Type MH (200 A) w/ Isolation Contactor and Shorting Contactor

FIG. 2

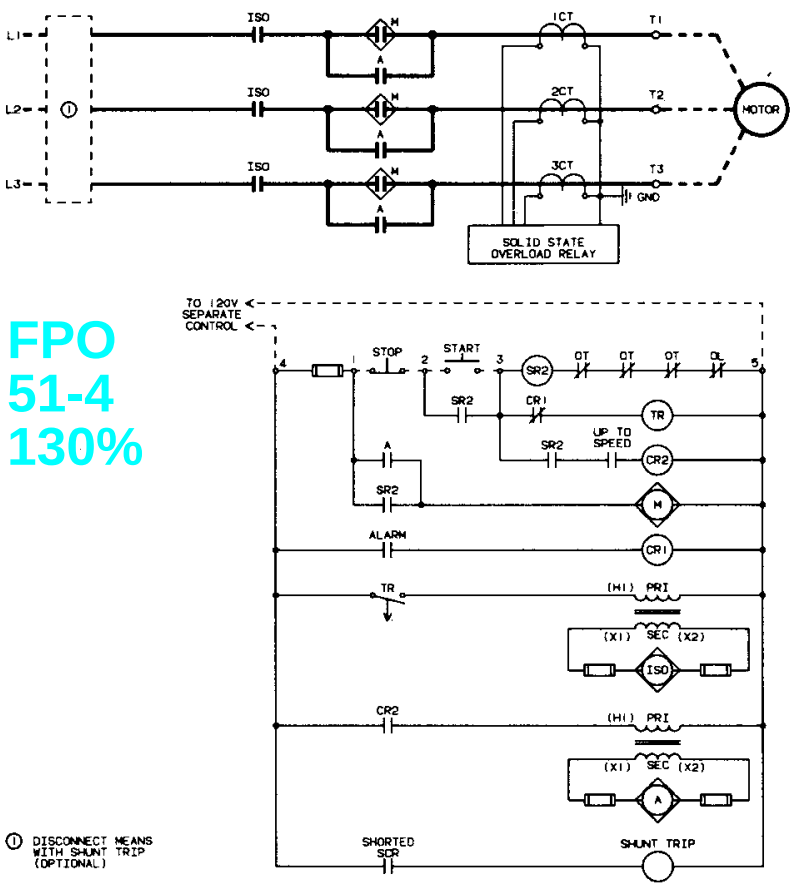

FPO
51-4
130%

Type MJ (320 A), MK (500 A) and MM (750 A) w/ Isolation Contactor and Shorting Contactor

We Respond.®

Reversing Starters, 2- and 3-Pole, Size 00-1: Class 8736 Type S

FIG. 1

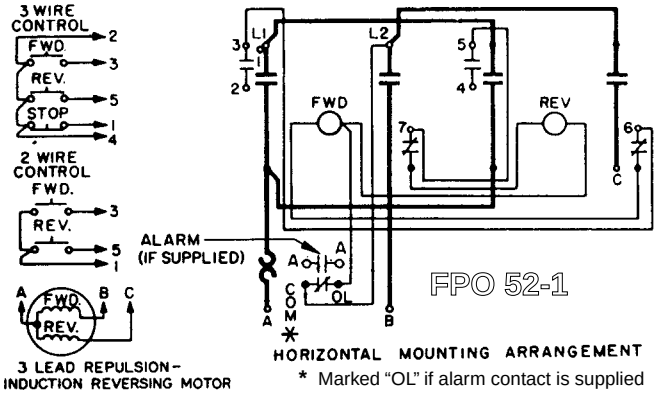

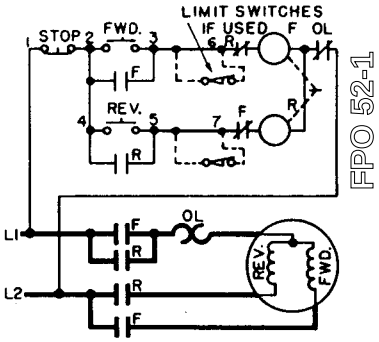

Wiring Diagram — Elementary Diagram

2-Pole, w/ Single Phase, 3-Lead Motor

FIG. 2

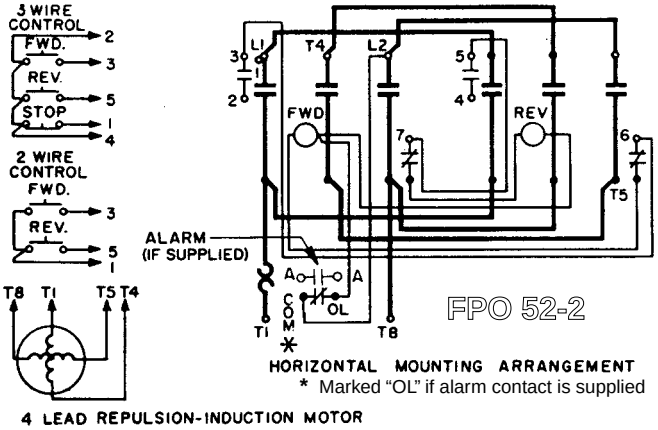

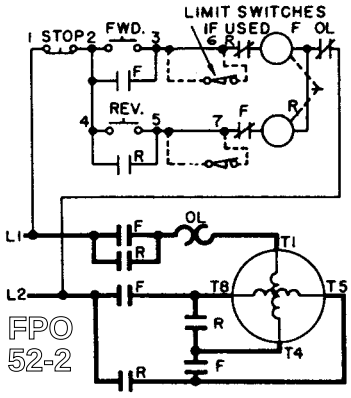

Wiring Diagram — Elementary Diagram

3-Pole, w/ Single Phase, 4-Lead Repulsion-Induction Motor

FIG. 3

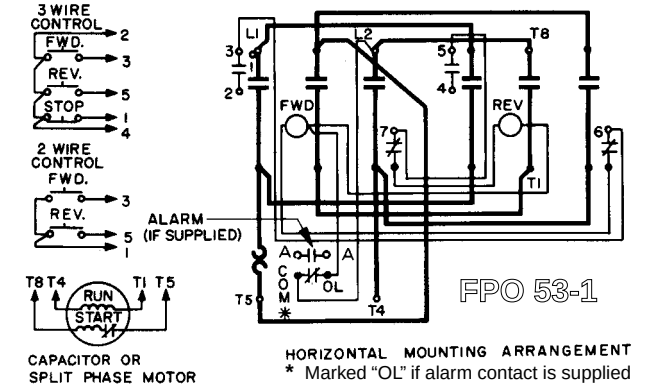

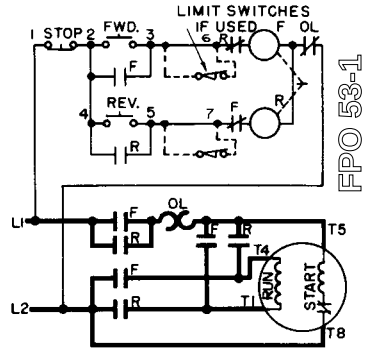

Wiring Diagram — Elementary Diagram

3-Pole, w/ Single Phase, 4-Lead Capacitor or Split-Phase Motor

Reversing Starters, 3- and 4-Pole: Class 8736 Type S

FIG. 1

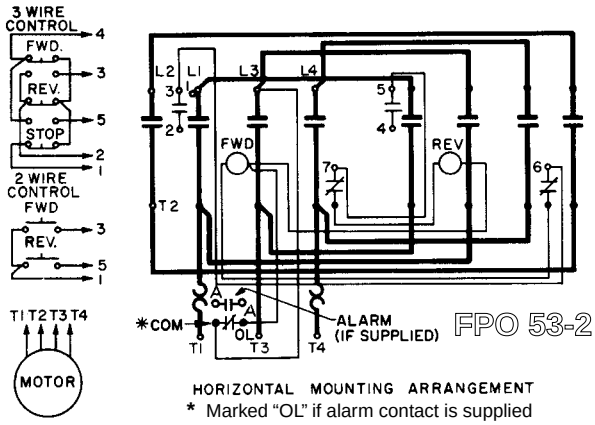

Wiring Diagram

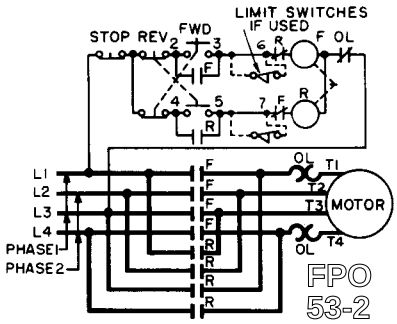

Elementary Diagram

Size 00-2, 4-Pole, 2-Phase

FIG. 2

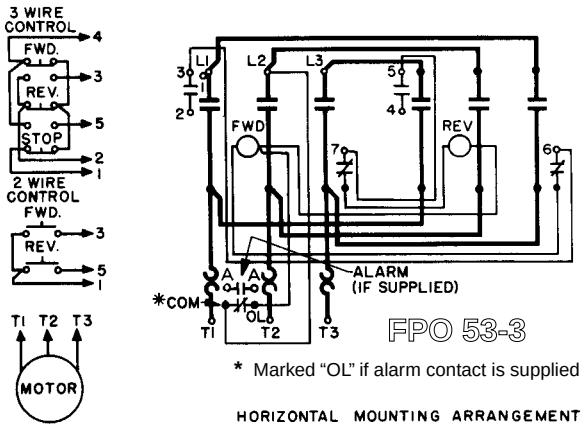

Wiring Diagram

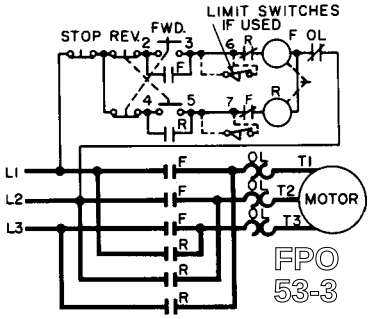

Elementary Diagram

Size 00-4, 3-Pole, 3-Phase

FIG. 3

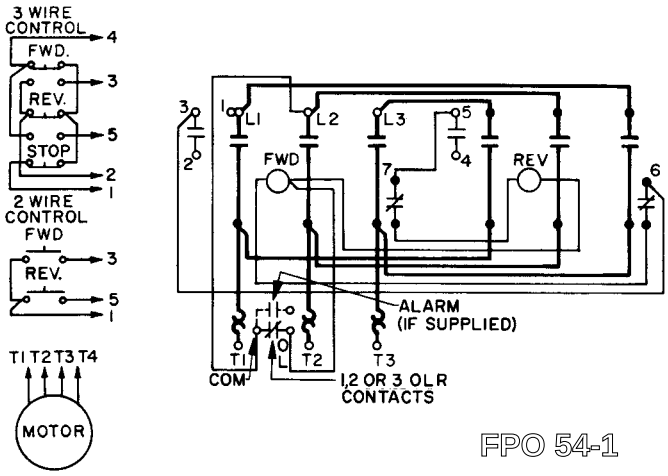

Wiring Diagram

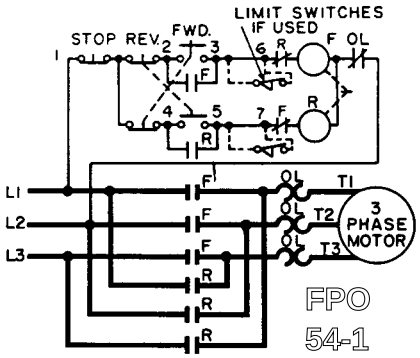

Elementary Diagram

Size 5, 3-Pole, 3-Phase

We Respond.®

Starters for 2-Speed, 2-Winding (Separate Winding), 3-Phase Motors: Class 8810 Type S

FIG. 1

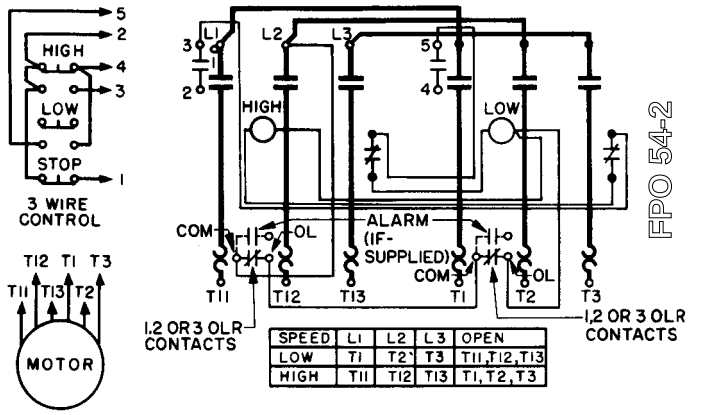

SPEED	L1	L2	L3	OPEN
LOW	T1	T2	T3	T11,T12,T13
HIGH	T11	T12	T13	T1,T2,T3

Wiring Diagram

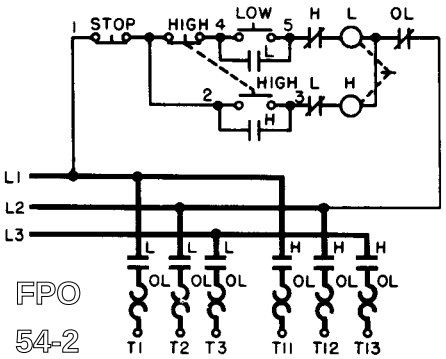

Elementary Diagram

Size 0-4

FIG. 2

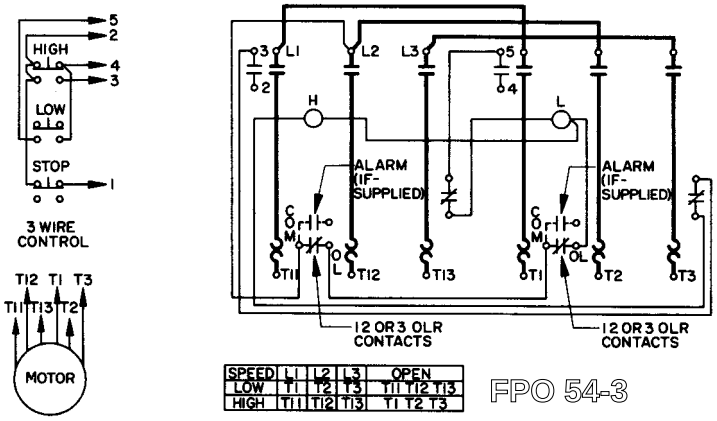

SPEED	L1	L2	L3	OPEN
LOW	T1	T2	T3	T11 T12 T13
HIGH	T11	T12	T13	T1 T2 T3

Size 5 Wiring Diagram

Starters for 2-Speed, 1-Winding (Consequent Pole), Constant or Variable Torque, 3-Phase Motors: Class 8810 Type S

FIG. 3

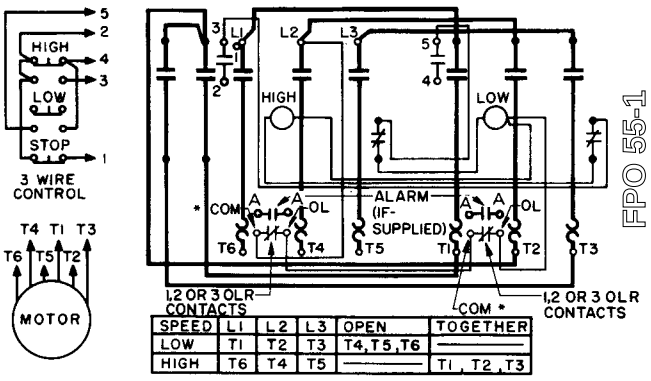

SPEED	L1	L2	L3	OPEN	TOGETHER
LOW	T1	T2	T3	T4,T5,T6	——
HIGH	T6	T4	T5	——	T1 , T2 , T3

* Marked "OL" if alarm contact is supplied

Wiring Diagram

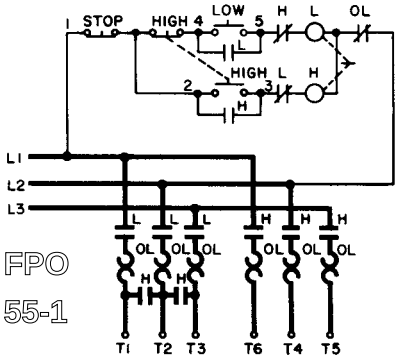

Elementary Diagram

Size 0-2

Starters for 2-Speed, 1-Winding (Consequent Pole), Constant or Variable Torque, 3-Phase Motors: Class 8810 Type S

FIG. 1

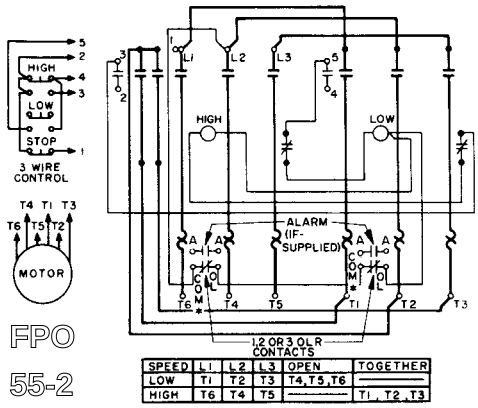

SPEED	L1	L2	L3	OPEN	TOGETHER
LOW	T1	T2	T3	T4, T5, T6	—
HIGH	T6	T4	T5	—	T1, T2, T3

* Marked "OL" if alarm contact is supplied

Size 3 and 4 Wiring Diagram

FIG. 2

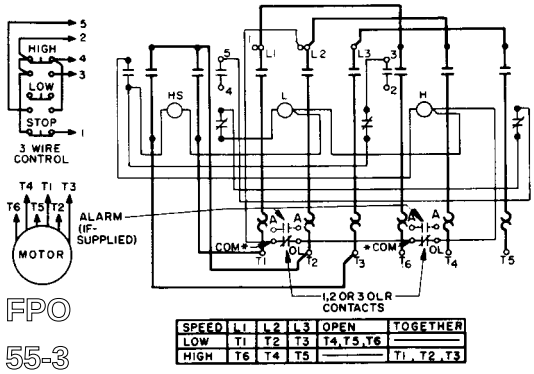

SPEED	L1	L2	L3	OPEN	TOGETHER
LOW	T1	T2	T3	T4, T5, T6	—
HIGH	T6	T4	T5	—	T1, T2, T3

Size 5 Wiring Diagram

Starters for 2-Speed, 1-Winding (Consequent Pole), Constant Horsepower, 3-Phase Motors: Class 8810 Type S

FIG. 3

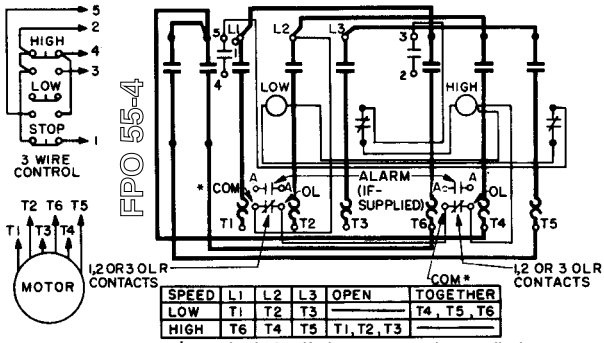

SPEED	L1	L2	L3	OPEN	TOGETHER
LOW	T1	T2	T3	—	T4, T5, T6
HIGH	T6	T4	T5	T1, T2, T3	—

* Marked "OL" if alarm contact is supplied

Wiring Diagram

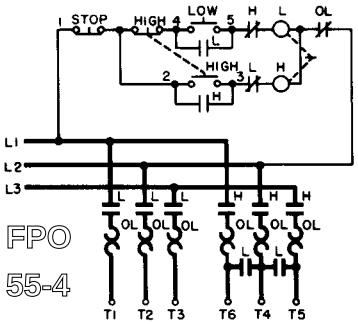

Elementary Diagram

Size 0-2

FIG. 4

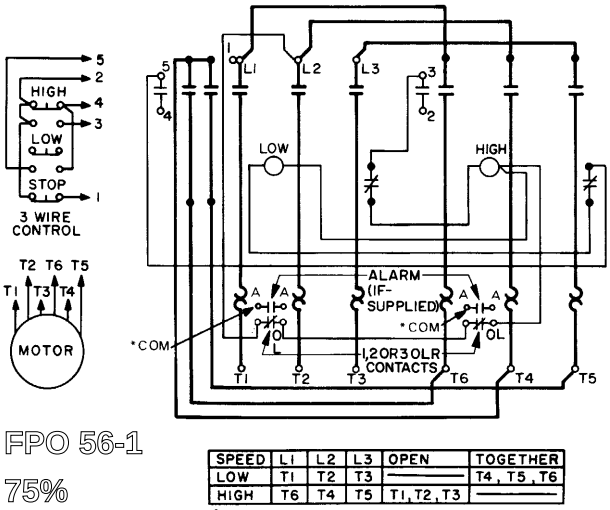

SPEED	L1	L2	L3	OPEN	TOGETHER
LOW	T1	T2	T3	—	T4, T5, T6
HIGH	T6	T4	T5	T1, T2, T3	—

* Marked "OL" if alarm contact is supplied

Size 3 and 4 Wiring Diagram

FIG. 5

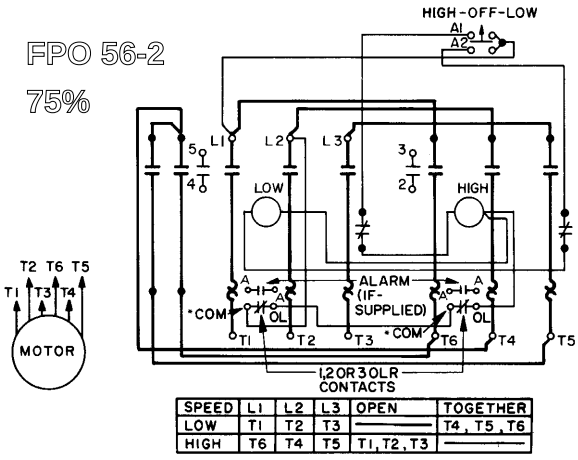

SPEED	L1	L2	L3	OPEN	TOGETHER
LOW	T1	T2	T3	—	T4, T5, T6
HIGH	T6	T4	T5	T1, T2, T3	—

* Marked "OL" if alarm contact is supplied

Size 0, w/ High-Off-Low Selector Switch (Form C7) Wiring Diagram

We Respond.®

Form R1

FIG. 1

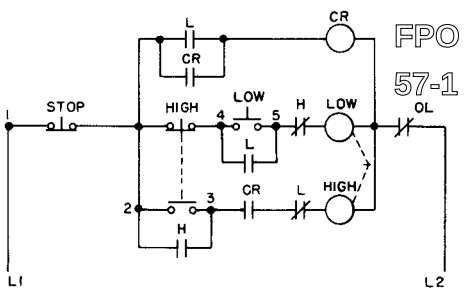

Compelling Relay, Requiring Motor Starting in Low Speed

Form R2

FIG. 2

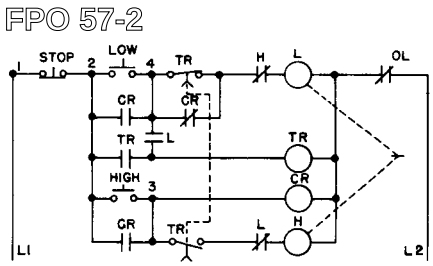

Accelerating Relay, Providing Timed Acceleration to Selected Speed

Form R3

FIG. 3

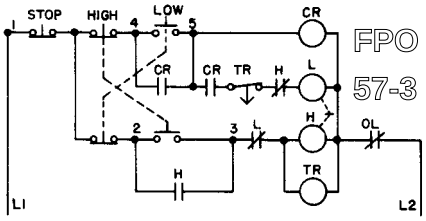

Decelerating Relay, w/ Time Delay During Transfer from Higher to Lower Speed

Form R2R3

FIG. 4

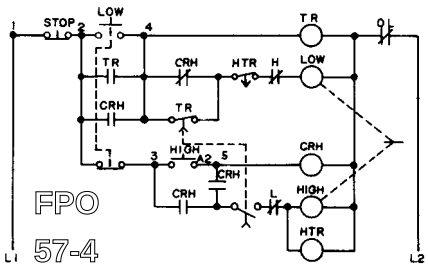

Accelerating Relay and Decelerating Relay

Form R1R3

FIG. 5

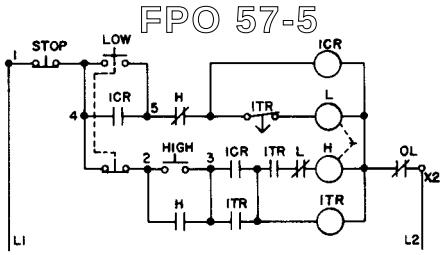

Compelling Relay and Decelerating Relay

Form A10C

FIG. 6

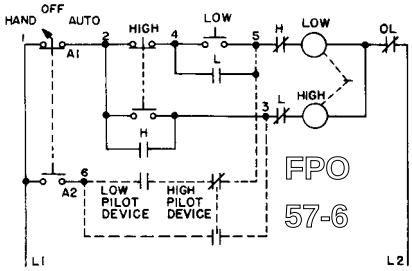

Hand-Off-Auto Selector Switch and High-Low Push Button

Form CC17

FIG. 7

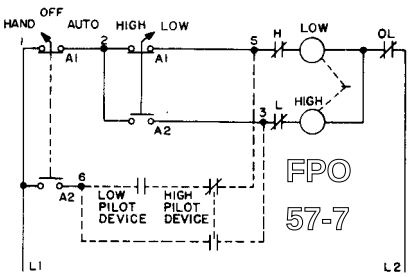

Hand-Off-Auto Selector Switch and High-Low Selector Switch

Form A10CR1

FIG. 8

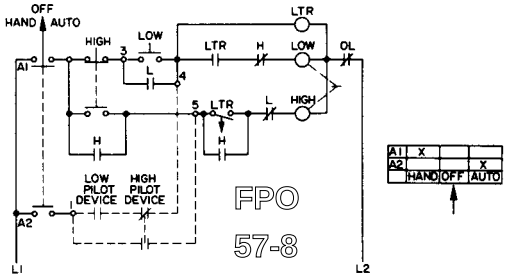

Hand-Off-Auto Selector Switch and High-Low Push Button w/ Compelling Relay/Timer

Form C25

FIG. 1

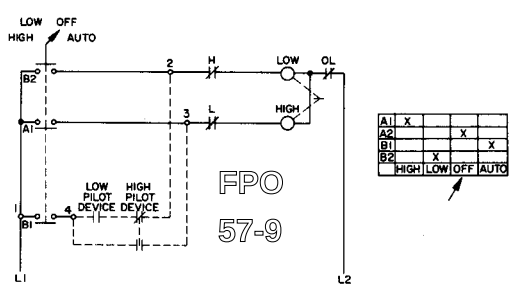

High-Low-Off-Auto Selector Switch

Form CC17 R2R3

FIG. 2

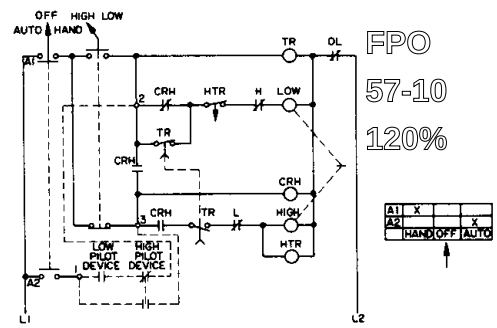

Hand-Off-Auto Selector Switch and High-Low Selector Switch w/ Accelerating and Decelerating Relay/Timer

Multispeed Motor Connections: 1-Phase, 2-Speed Motors

FIG. 3

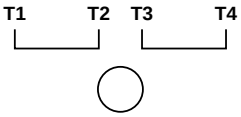

Speed	L1	L2	Open	Together
Low	T1	T2	T3,T4	—
High	T3	T4	T1,T2	—

2 Windings

FIG. 4

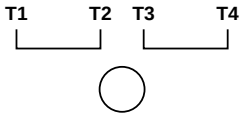

Speed	L1	L2	Open	Together
Low	T3	T4	T1,T2	—
High	T1	T2	T3,T4	—

2 Windings

FIG. 5

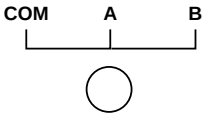

Speed	L1	L2	Open	Together
Low	COM	A	B	—
High	COM	B	A	—

1 Winding

FIG. 6

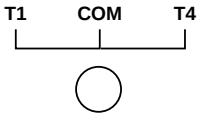

Speed	L1	L2	Open	Together
Low	COM	T1	T4	—
High	COM	T4	T1	—

1 Winding

FIG. 7

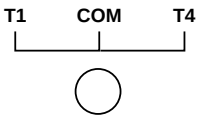

Speed	L1	L2	Open	Together
Low	T1	T4	COM	—
High	T1	COM	—	T1,T4

1 Winding

FIG. 8

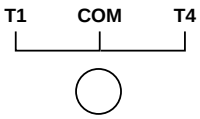

Speed	L1	L2	Open	Together
Low	T1	COM	—	T1,T4
High	T1	T4	COM	—

1 Winding

Multispeed Motor Connections: 3-Phase, 2-Speed Motors

FIG. 9

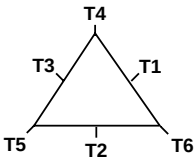

Speed	L1	L2	L3	Open	Together
Low	T1	T2	T3	—	T4,T5,T6
High	T6	T4	T5	All others	—

1 Winding, Constant Horsepower

FIG. 10

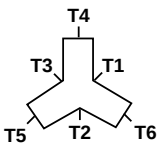

Speed	L1	L2	L3	Open	Together
Low	T1	T2	T3	All others	—
High	T6	T4	T5	—	T1,T2,T3

1 Winding, Constant Torque

FIG. 11

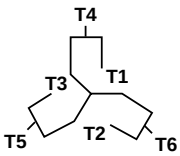

Speed	L1	L2	L3	Open	Together
Low	T1	T2	T3	All others	—
High	T6	T4	T5	—	T1,T2,T3

1 Winding, Variable Torque

FIG. 12

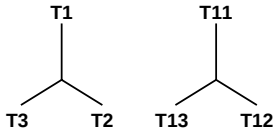

Speed	L1	L2	L3	Open
Low	T1	T2	T3	All others
High	T11	T12	T13	All others

Separate Windings

FIG. 13

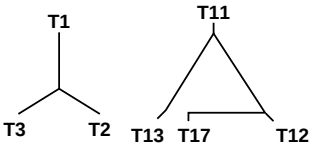

Speed	L1	L2	L3	Open
Low	T1	T2	T3	All others
High	T11	T12	T13,T17	All others

Separate Windings

FIG. 14

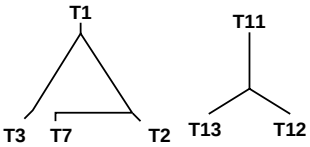

Speed	L1	L2	L3	Open
Low	T1	T2	T3,T7	All others
High	T11	T12	T13	All others

Separate Windings

We Respond.®

Multispeed Motor Connections: 3-Phase, 2-Speed Motors

FIG. 1

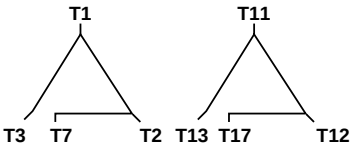

Speed	L1	L2	L3	Open
Low	T1	T2	T3,T7	All others
High	T11	T12	T13,T17	All others

Separate Windings

FIG. 2

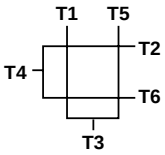

Speed	L1	L3	L2	L4	Open
Low	T1	T5	T2	T6	T3,T4
High	T1,T5	T3	T2,T6	T4	—

2-Phase, 1 Winding, Variable Torque

FIG. 3

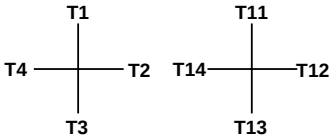

Speed	L1	L3	L2	L4	Open
Low	T1	T3	T2	T4	All others
High	T11	T13	T12	T14	All others

2-Phase, Separate Windings

Multispeed Motor Connections: 3-Phase, 3-Speed Motors

FIG. 4

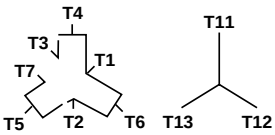

Speed	L1	L2	L3	Open	Together
Low	T1	T2	T3,T7	All others	—
2nd	T6	T4	T5	—	T1,T2,T3,T7
High	T11	T12	T13	All others	—

2 Windings, Constant Torque

FIG. 5

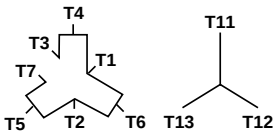

Speed	L1	L2	L3	Open	Together
Low	T1	T2	T3,T7	All others	—
2nd	T11	T12	T13	All others	—
High	T6	T4	T5	All others	T1,T2,T3,T7

2 Windings, Constant Torque

FIG. 6

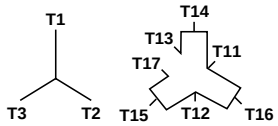

Speed	L1	L2	L3	Open	Together
Low	T1	T2	T3	All others	—
2nd	T11	T12	T13,T17	All others	—
High	T16	T14	T15	All others	T11,T12,T13,T17

2 Windings, Constant Torque

FIG. 7

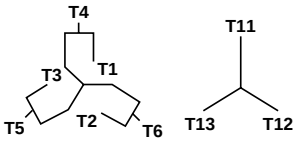

Speed	L1	L2	L3	Open	Together
Low	T1	T2	T3	All others	—
2nd	T6	T4	T5	All others	T1,T2,T3
High	T11	T12	T13	All others	—

2 Windings, Variable Torque

FIG. 8

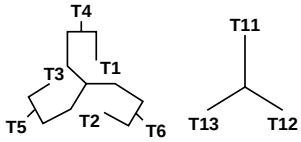

Speed	L1	L2	L3	Open	Together
Low	T1	T2	T3	All others	—
2nd	T11	T12	T13	All others	—
High	T6	T4	T5	All others	T1,T2,T3

2 Windings, Variable Torque

FIG. 9

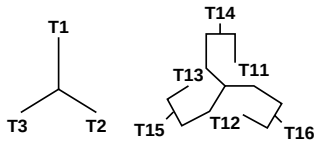

Speed	L1	L2	L3	Open	Together
Low	T1	T2	T3	All others	—
2nd	T11	T12	T13	All others	—
High	T16	T14	T15	All others	T11,T12,T13

2 Windings, Variable Torque

Multispeed Motor Connections: 3-Phase, 4-Speed Motors

FIG. 10

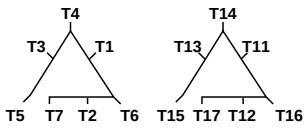

Speed	L1	L2	L3	Open	Together
Low	T1	T2	T3	All others	T4,T5,T6,T7
2nd	T6	T4	T5,T7	All others	—
3rd	T11	T12	T13	All others	T14,T15,T16,T17
High	T16	T14	T15,T17	All others	—

2 Windings, Constant Horsepower

FIG. 11

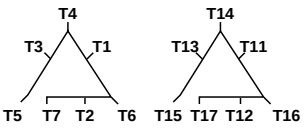

Speed	L1	L2	L3	Open	Together
Low	T1	T2	T3	All others	T4,T5,T6,T7
2nd	T11	T12	T13	All others	T14,T15,T16,T17
3rd	T6	T4	T5,T7	All others	—
High	T16	T14	T15,T17	All others	—

2 Windings, Constant Horsepower

FIG. 12

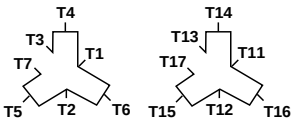

Speed	L1	L2	L3	Open	Together
Low	T1	T2	T3,T7	All others	—
2nd	T6	T4	T5	All others	T1,T2,T3,T7
3rd	T11	T12	T13,T17	All others	—
High	T16	T14	T15	All others	T11,T12,T13,T17

2 Windings, Constant Torque

FIG. 13

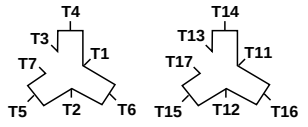

Speed	L1	L2	L3	Open	Together
Low	T1	T2	T3,T7	All others	—
2nd	T11	T12	T13,T17	All others	—
3rd	T6	T4	T5	All others	T1,T2,T3,T7
High	T16	T14	T15	All others	T11,T12,T13,T17

2 Windings, Constant Torque

FIG. 14

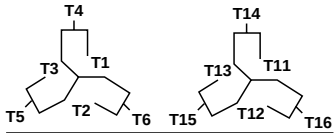

Speed	L1	L2	L3	Open	Together
Low	T1	T2	T3	All others	—
2nd	T6	T4	T5	All others	T1,T2,T3
3rd	T11	T12	T13	All others	—
High	T16	T14	T15	All others	T11,T12,T13

2 Windings, Variable Torque

FIG. 15

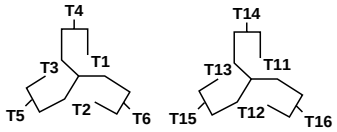

Speed	L1	L2	L3	Open	Together
Low	T1	T2	T3	All others	—
2nd	T11	T12	T13	All others	—
3rd	T6	T4	T5	All others	T1,T2,T3
High	T16	T14	T15	All others	T11,T12,T13

2 Windings, Variable Torque

Programmable Lighting Controller:
Class 8865 Type TC12

FIG. 1

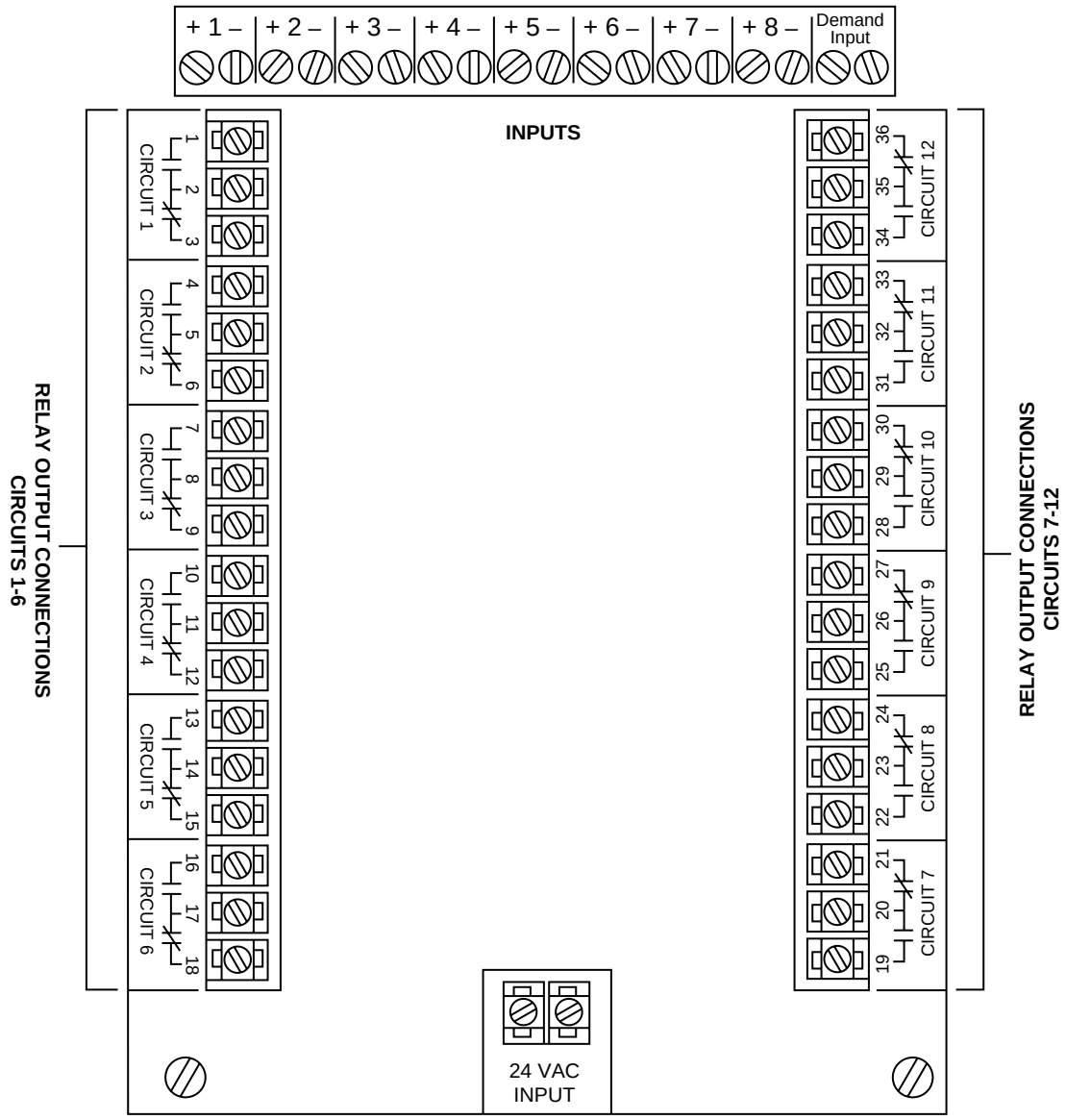

We Respond.®

Load Connections for AC Lighting Contactors: Class 8903

FIG. 1

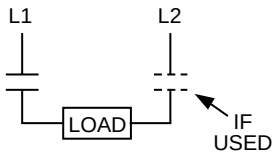

$V_{load} = V_{line\text{-}tol\text{-}line}$

1-Phase, 2-Wire, Single Load

FIG. 2

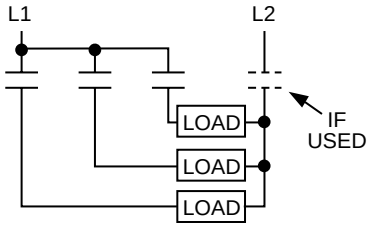

$V_{load} = V_{line\text{-}to\text{-}line}$

1-Phase, 2-Wire, Multiple Loads

FIG. 3

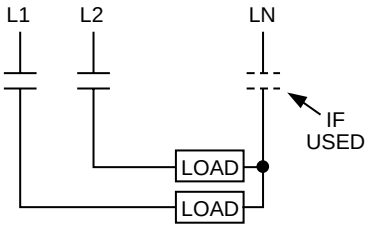

$V_{load} = V_{line\text{-}to\text{-}neu\text{-}}$

1-Phase, 3-Wire, Loads Connected Line-to-Neutral

FIG. 4

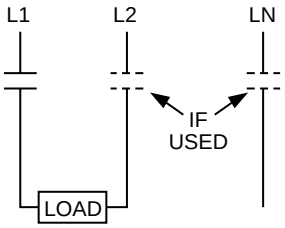

$V_{load} = V_{line\text{-}to\text{-}line}$

1-Phase, 3-Wire, Load Connected Line-to-Line

FIG. 5

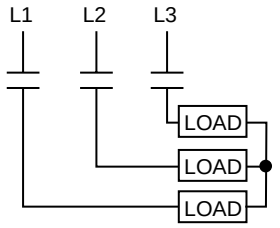

$V_{load} = \frac{V_{line\text{-}to\text{-}line}}{1.732}$

3-Phase, 3-Wire, Wye-Connected Load

FIG. 6

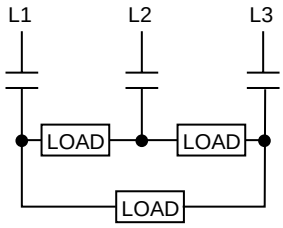

$V_{load} = V_{line\text{-}to\text{-}line}$ $\frac{I_{load}}{1.732} = I_{contacts}$

3-Phase, 3-Wire, Delta-Connected Load

FIG. 7

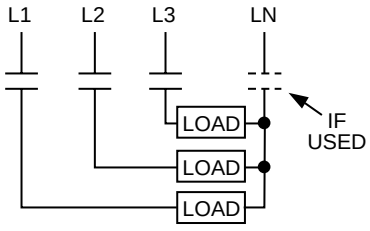

$V_{load} = V_{line\text{-}to\text{-}neu\text{-}}$

3-Phase, 4-Wire, Loads Connected Line-to-Neutral

Application Limits:

1. Voltage between line side conductors must not exceed line-to-line voltage rating of contactor.
2. V_{load} must not exceed volts-per-load rating of contactor.
3. Line current carried by any contact must not exceed ampere rating of contactor.

For contact ratings, refer to the Square D Digest.

Control Circuit Connections for Electrically-Held Contactors: Class 8903 Type L and S

FIG. 1

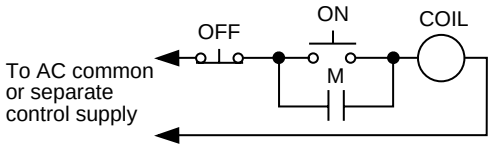

On-Off Push Button (Form A12)

FIG. 2

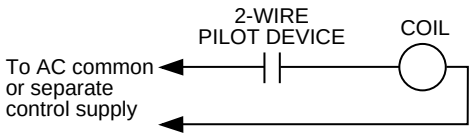

Direct Control from Pilot Device

FIG. 3

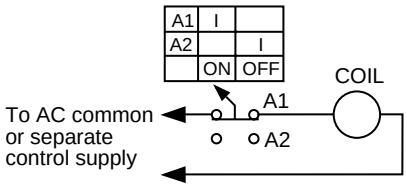

On-Off Selector Switch (Form C6)

FIG. 4

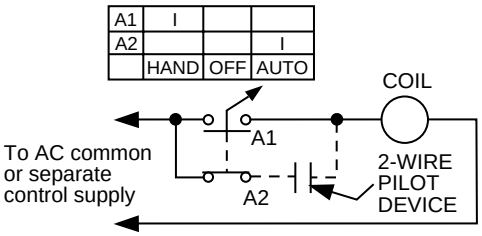

Hand-Off-Auto Selector Switch (Form C)

Control Circuit Connections for Mechanically-Held Contactors: Class 8903 Type LX and S

FIG. 5

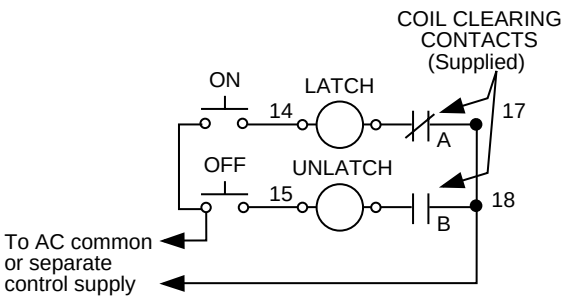

On-Off Push Button (Form A3)

FIG. 6

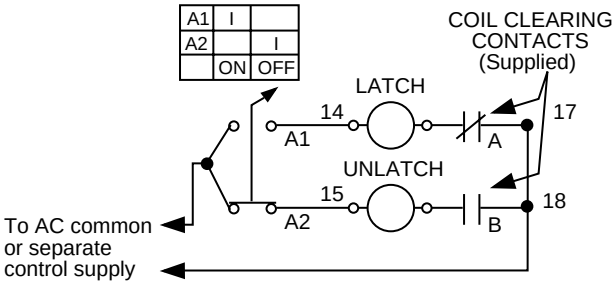

On-Off Selector Switch (Form C6)

FIG. 7

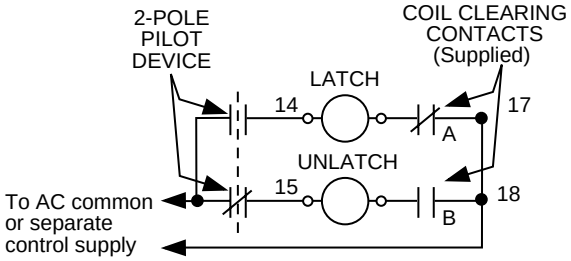

Control from 2-Pole Pilot Device

FIG. 8

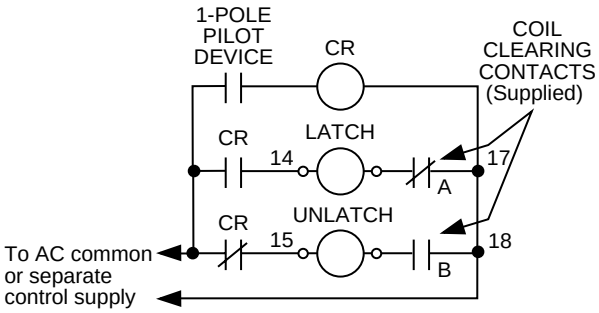

1-Pole Pilot Device w/ CR relay (Form R6)

We Respond.®

Panelboard Type Wiring: Class 8903 Type PB, 30-225 A

FIG. 1

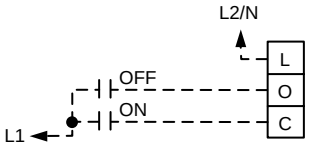

Control Circuit – Standard

FIG. 2

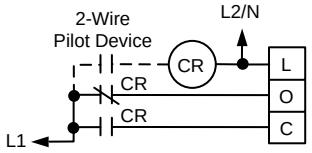

Control Circuit – 2-Wire Control (Form R6)

FIG. 3

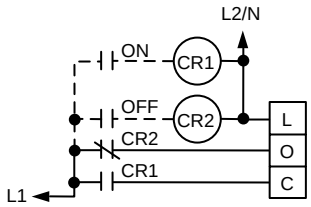

Control Circuit – Long-Distance Control (Form R62)

FIG. 4

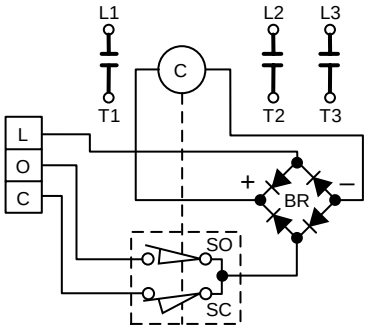

L = Line (common)
O = Open (unlatch)
C = Close (latch)

Omit middle pole for 2-pole unit

Power Circuit

QWIK-STOP® Electronic Motor Brake: Class 8922

FIG. 5

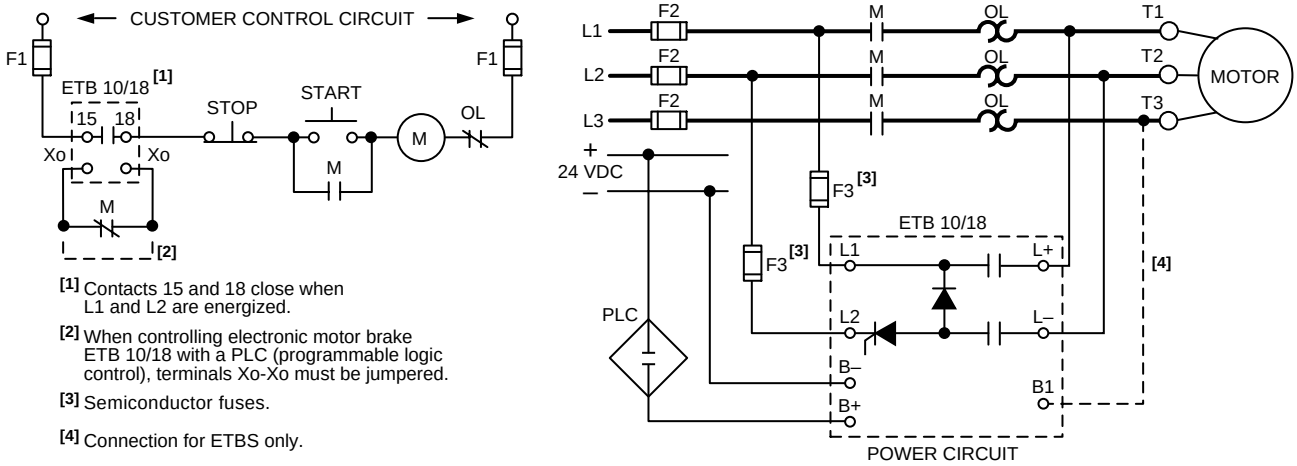

[1] Contacts 15 and 18 close when L1 and L2 are energized.

[2] When controlling electronic motor brake ETB 10/18 with a PLC (programmable logic control), terminals Xo-Xo must be jumpered.

[3] Semiconductor fuses.

[4] Connection for ETBS only.

Type ETB10, ETB18 and ETBS18 w/ Internal Braking Contactor

FIG. 6

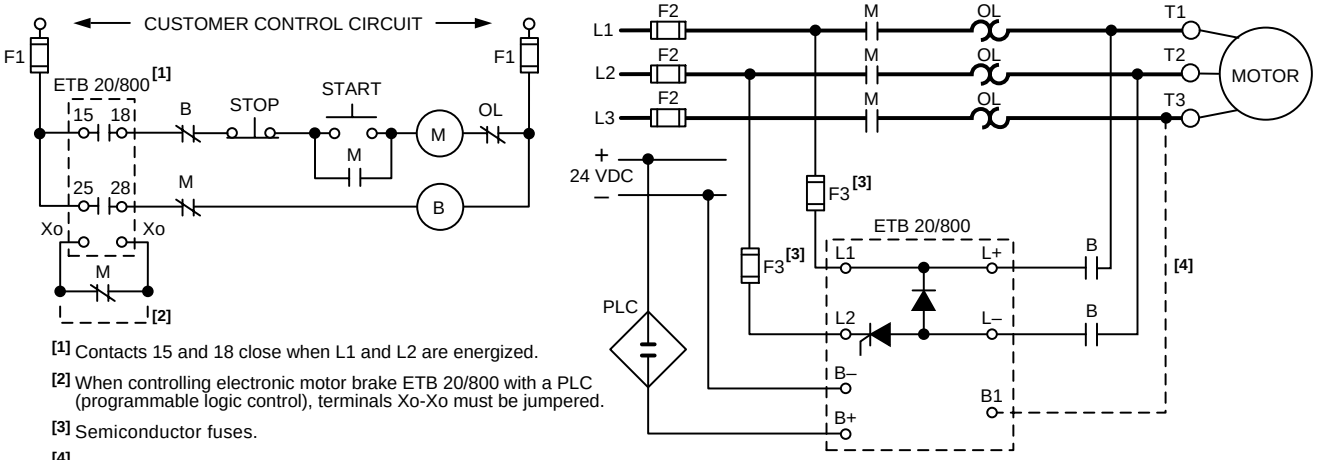

[1] Contacts 15 and 18 close when L1 and L2 are energized.

[2] When controlling electronic motor brake ETB 20/800 with a PLC (programmable logic control), terminals Xo-Xo must be jumpered.

[3] Semiconductor fuses.

[4] Connection for ETBS only.

QWIK-STOP is a registered trademark of Square D.

Type ETB20-ETB800 and ETBS20-ETBS800

QWIK-STOP® Electronic Motor Brake: Class 8922 Type ETBC

FIG. 1

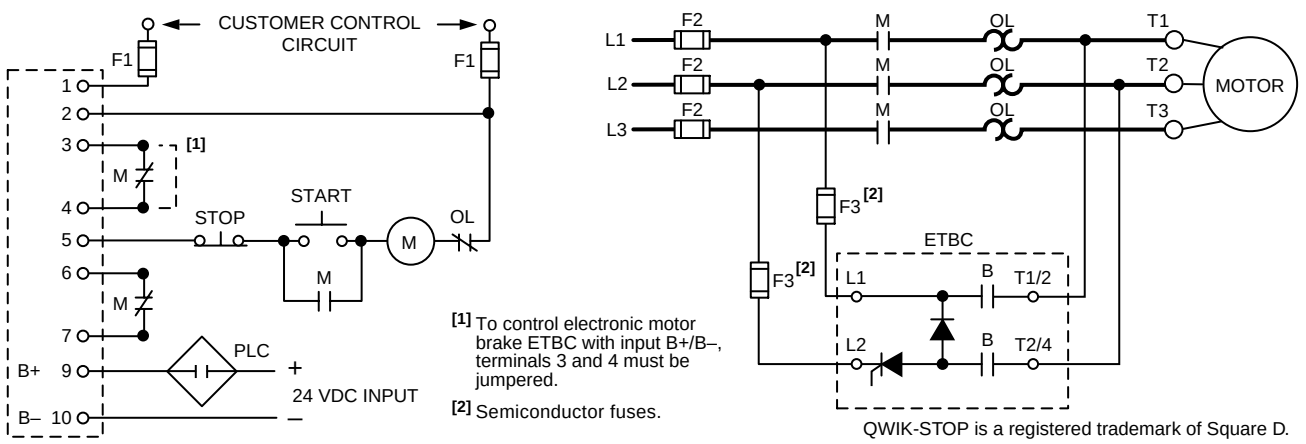

[1] To control electronic motor brake ETBC with input B+/B–, terminals 3 and 4 must be jumpered.

[2] Semiconductor fuses.

QWIK-STOP is a registered trademark of Square D.

Type ETBC

AC Duplex Motor Controller: Class 8941

FIG. 2

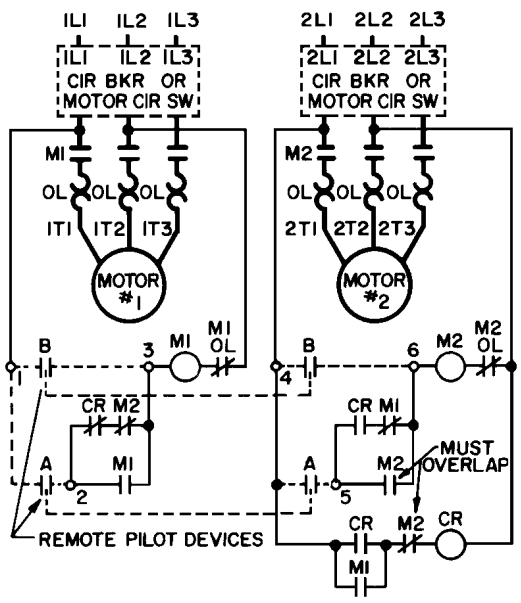

Elementary Diagram for Duplex Motor Controller w/ Electric Alternator

Fiber Optic Transceiver: Class 9005

FIG. 3

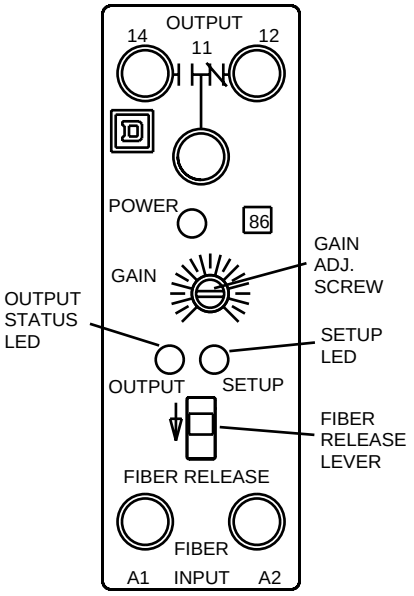

Transceiver, Front View

FIG. 4

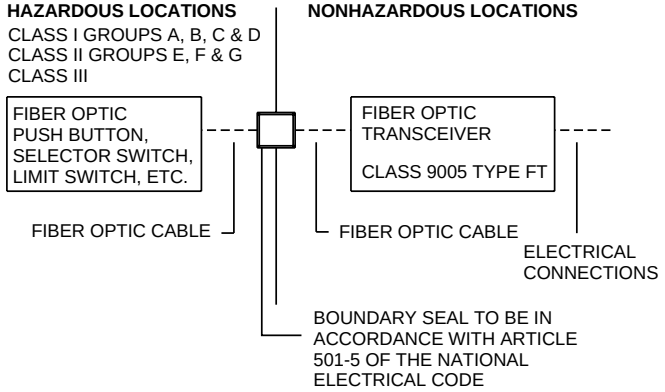

Location

We Respond.®

Photoelectric Switches: Class 9006 Type PE1 (Obsolete)

FIG. 1

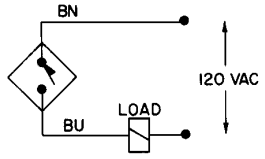

Connect load in series. To prevent damage, all switches except emitters must have load connected to switch.

2-Wire AC, Single Device Operation

FIG. 2

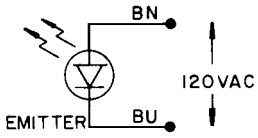

AC thru-beam emitter has no output switching capability, therefore leakage current is not applicable. Thru-beam emitter is connected directly across the AC line and typically draws 15 mA.

AC Emitter

FIG. 3

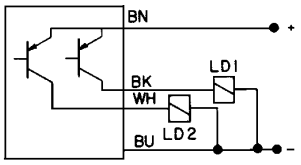

DC switches cannot be wired in series. To prevent damage, all switches except emitters must have load connected to switch.

4-Wire DC, Single Device Operation, 10-30 VDC, 250 mA Max. Load

FIG. 4

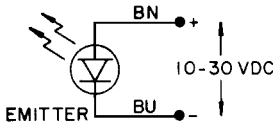

DC thru-beam emitter has no output switching capability, therefore it requires only a 2-wire cable connected directly across the DC. Thru-beam emitter draws a maximum of 45 mA.

DC Emitter

Photoelectric Switches: Class 9006 Type PE6 and PE7 (Obsolete)

FIG. 5

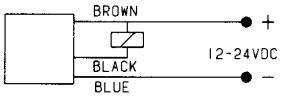

12-24 VDC, Sinking (NPN)

FIG. 6

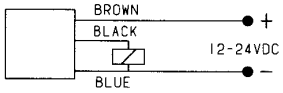

12-24 VDC, Sourcing (PNP)

FIG. 7

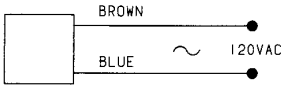

120 VAC, Emitter Only

These switches are light operated only.

Beam broken = load deenergized
Beam unbroken = load energized

Photoelectric Switches: Class 9006 Type PEA120 (Obsolete)

FIG. 8

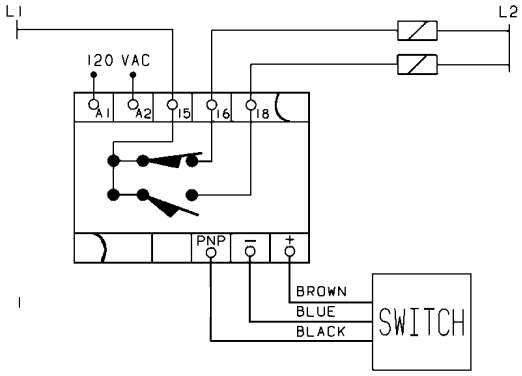

Diagram shows contact arrangement with beam broken.

120 VAC Amplifier

Inductive Proximity Switches: Class 9006 Type PS (Obsolete)

FIG. 9

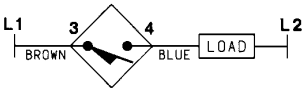

2-Wire AC, N.O.

FIG. 10

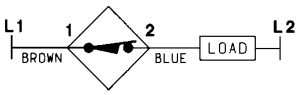

2-Wire AC, N.C.

FIG. 11

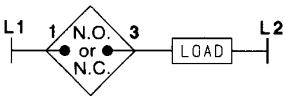

2-Wire AC, N.O. or N.C.

FIG. 12

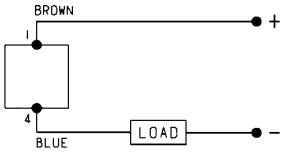

2-Wire DC, N.O.

FIG. 13

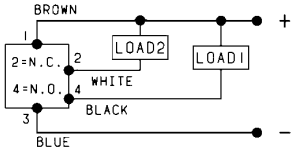

4-Wire DC, Sinking (NPN)

FIG. 14

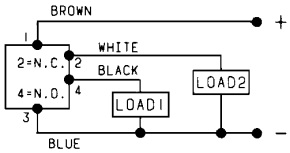

4-Wire DC, Sourcing (PNP)

XS Tubular Inductive Proximity Sensors

FIG. 1

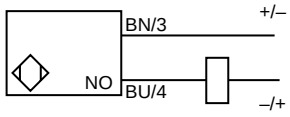

2-Wire DC, Non-Polarized

FIG. 2

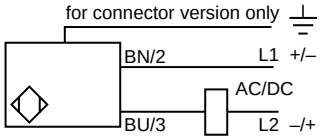

2-Wire AC/DC

FIG. 3

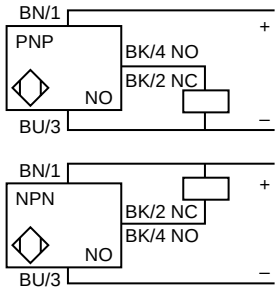

3-Wire DC, N.O. or N.C.

FIG. 4

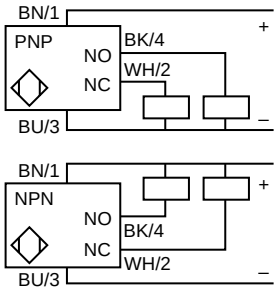

3-Wire DC, N.O. and N.C., Complementary

FIG. 5

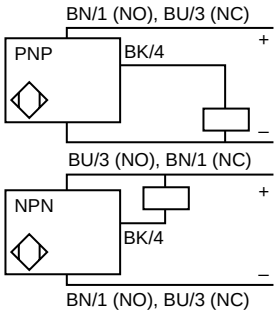

3-Wire DC, Selectable PNP/NPN, N.O./N.C.

XSC Rectangular Inductive Proximity Sensors

FIG. 6

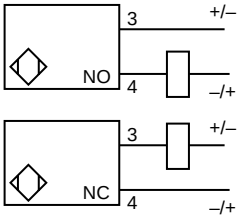

2-Wire DC, Non-Polarized

FIG. 7

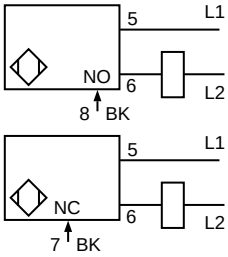

2-Wire AC, Programmable

FIG. 8

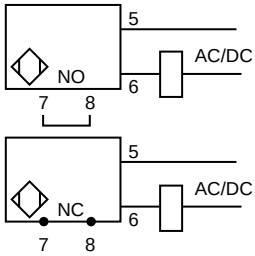

2-Wire AC/DC, Programmable

FIG. 9

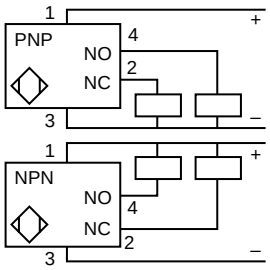

3-Wire DC, N.O. or N.C.

XSF Rectangular Inductive Proximity Sensors

FIG. 10

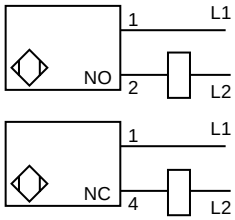

2-Wire AC, Programmable N.O. or N.C.

FIG. 11

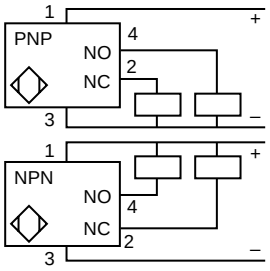

3-Wire DC, N.O. or N.C.

XSD Rectangular Inductive Proximity Sensors

FIG. 12

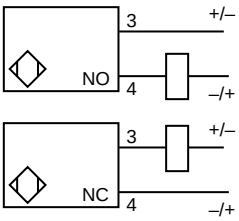

2-Wire DC, Non-Polarized

FIG. 13

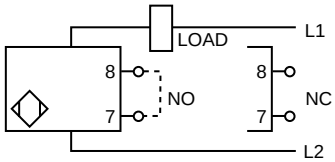

2-Wire AC, Programmable N.O. or N.C.

FIG. 14

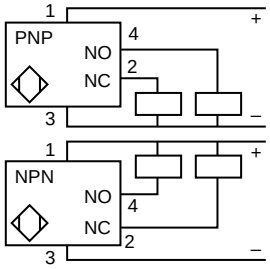

3-Wire DC, N.O. or N.C.

XS Tubular Inductive Proximity NAMUR Sensors

FIG. 1

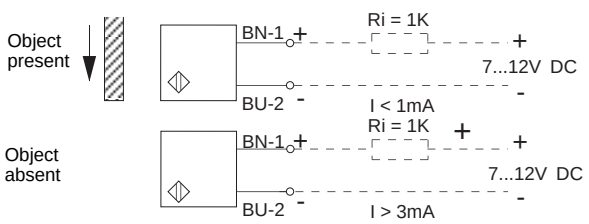

Non-Intrinsically Safe Applications (Normal Safe Zone), Connected to a Solid State Input

FIG. 2

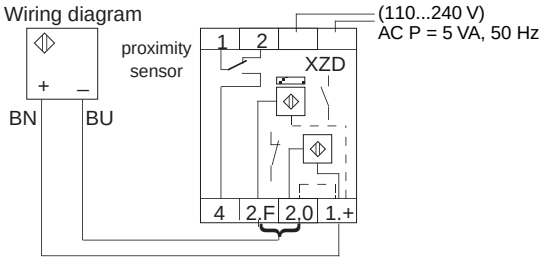

With XZD Power Supply/Relay Amplifier Unit

XS Inductive Proximity Sensors w/ Analog Output

FIG. 3

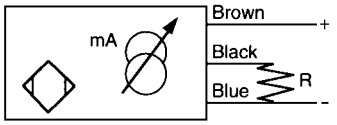

Output current	Value of Load R (max.)
@ 24 V:	
0-10 mA	1800 Ω
0-16 mA	1125 Ω
@ 48 V:	
0-10 mA	4200 Ω

2-Wire DC

FIG. 4

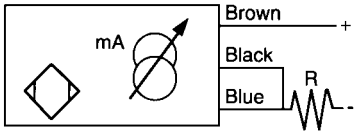

Output current	Value of Load R (max.)
@ 24 V:	
4-14 mA	640 Ω
4-20 mA	450 Ω
@ 48 V:	
4-14 mA	2350 Ω

3-Wire DC

These sensors may be wired in the 2- or 3-wire mode, depending on the current output characteristics required.

XTA Tubular Capacitive Proximity Sensors

FIG. 5

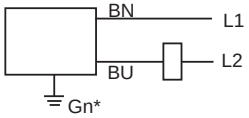

* Ground for XTA A115 only

2-Wire AC

FIG. 6

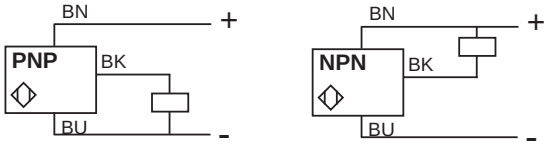

3-Wire DC

SG Magnet Actuated Proximity Sensors, Surface Mount Style

FIG. 1

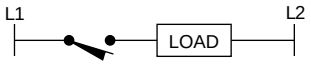

SGA 8016, SGA 8031, SGA 8182, SGA 8053, SGA 8176, SGA 8177, SG0 8168 and SG08239

FIG. 2

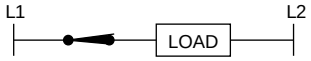

SGB 8175

FIG. 3

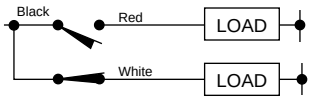

SG2 8195

SG Magnet Actuated Proximity Sensors, Limit Switch Style

FIG. 4

SG0 8003, SG1 8004, SGA 8005 and SGA 8040

FIG. 5

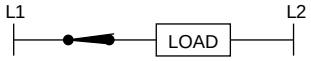

SG0 L8003 and SG1 L8004

FIG. 6

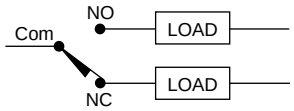

SGC 8027 and SGC 8025

FIG. 7

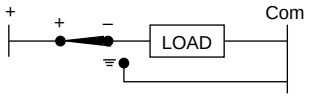

SG0 B8114, SG1 B8147, SG0 BL8114, SG0 BL8147 and SGC 8142-T-P

FIG. 8

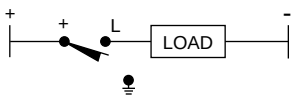

SG1 8056 is normally closed. Connect red terminal (+) to power source. Connect minus (-) terminal to load. Housing must be connected to minus.

SG0 8079 and SG1 8056

SG Magnet Actuated Proximity Sensors, Tubular Style

FIG. 9

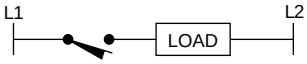

SGA 8057, SGA 8189, SGA 8072, SGA 8179, SGA 8180 and SGA 8038

FIG. 10

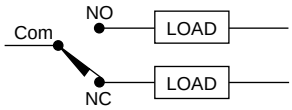

SGC 8058 and SGC 8181

SG Magnet Actuated Proximity Sensors, Maintained Contact

FIG. 11

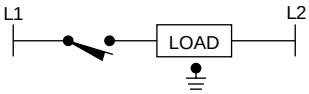

SGA 8018, SGO 8026

FIG. 12

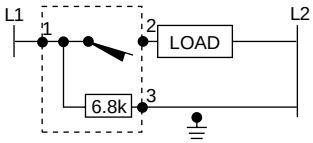

SGO 8110

ST Grounded Probe Switch

FIG. 13

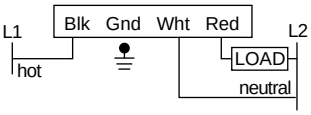

Target connected to ground

Cable Wiring

FIG. 14

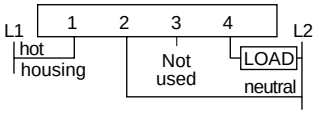

Target connected to ground. Housing must be grounded for proper operation.

Terminal strip Wiring

ST switches may be wired in series or parallel. For series operation, connect red lead (terminal 4) to black lead (terminal 1) of other switch. The voltage drop across each switch (in the closed state) does not exceed 2 VAC.

XUB Short Range Tubular Photoelectric Sensors

FIG. 15

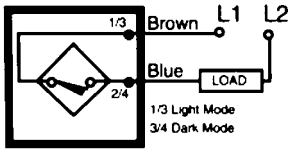

2-Wire AC

FIG. 16

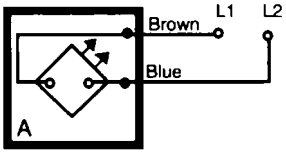

AC Emitter

FIG. 17

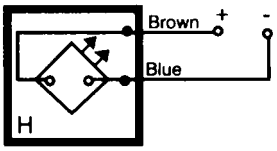

DC Emitter

XUM Miniature High Performance Photoelectric Sensors

FIG. 1

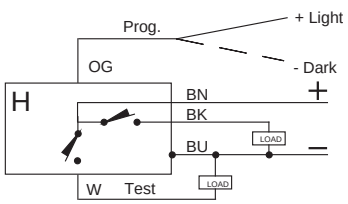

PNP Output

FIG. 2

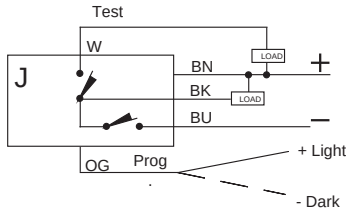

NPN Output

XUH and XUG Medium Range Photoelectric Sensors

FIG. 3

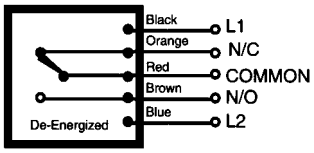

5-Wire AC

XUL Subcompact Photoelectric Sensors

FIG. 4

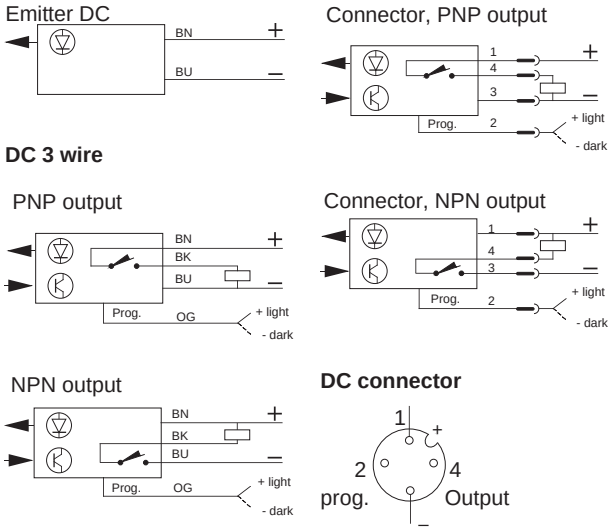

DC

FIG. 5

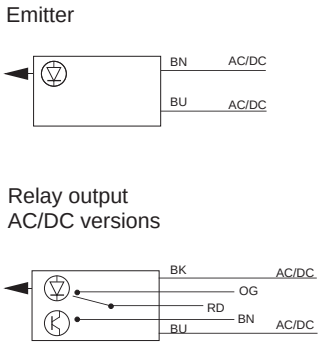

AC/DC

XUJ Compact High Performance Photoelectric Sensors

FIG. 6

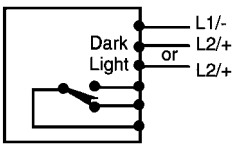

5-Wire Relay, AC/DC

FIG. 7

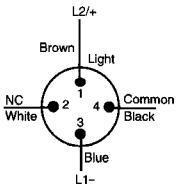

For dark mode connect Brown wire to terminal 2

For NO contact connect White wire to terminal 4

AC/DC Microchange DC Connector

FIG. 8

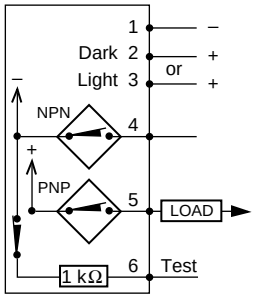

DC Output

FIG. 9

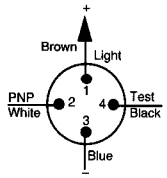

For dark mode connect Brown wire to terminal 2

For NPN output connect White wire to terminal 4

DC Output Microchange DC Connector

XUE Long Range Plug-In Photoelectric Sensors

FIG. 1

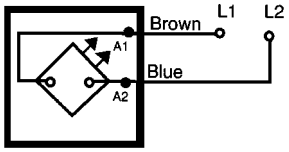

DC Emitter

FIG. 2

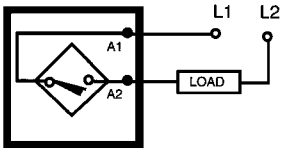

XUE A

FIG. 3

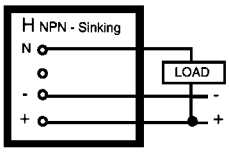

XUE H, NPN

FIG. 4

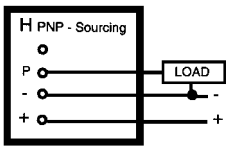

XUE H, PNP

FIG. 5

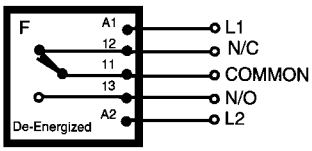

XUE F

FIG. 6

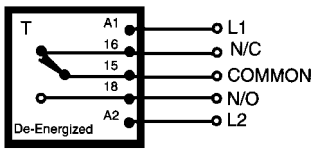

XUE T

XUR Color Registration Photoelectric Sensors

FIG. 7

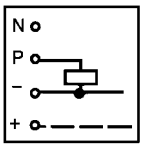

PNP

FIG. 8

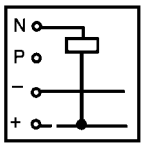

NPN

XUD Amplifiers

FIG. 9

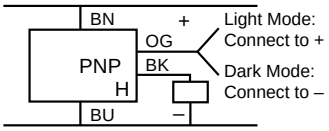

XUD H

FIG. 10

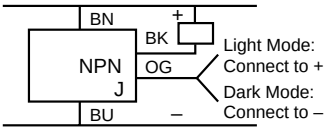

XUD J

XUG Amplifiers

FIG. 11

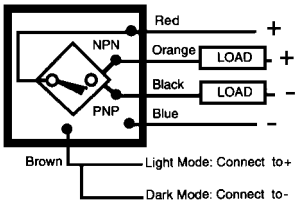

for XUF N Plastic Fiber Optics – DC models

XUE S Security Light Barriers

FIG. 12

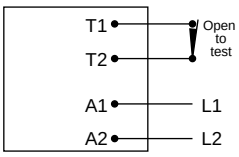

Emitter

FIG. 13

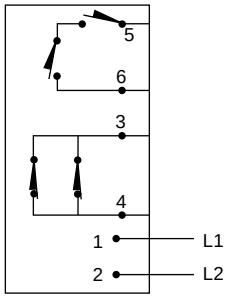

Receiver

XUV Photoelectric Sensors w/ Separate Optical Heads

FIG. 1

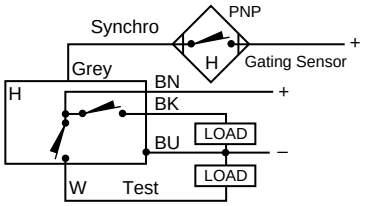

PNP Output

FIG. 2

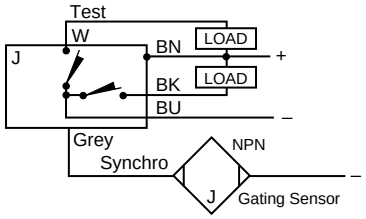

NPN Output

FIG. 3

1 CHANNEL AMPLIFIER

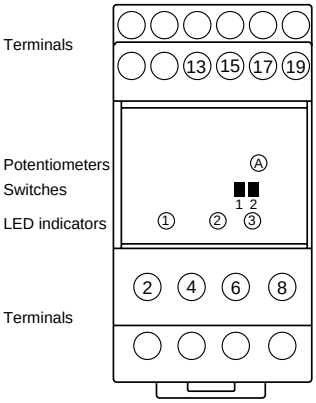

TERMINALS	
2	L1 Supply
4	L2 Supply
6-8	Relay output (1 contact)
13	Receiver (white wire)
15	Receiver shielded cable
17	Emitter shield
19	Emitter (red wire)

SWITCHES	
1	Light/Dark
2	Monostable timer (pulse stretcher)
POTENTIOMETERS	
A	Sensitivity adjustment
LED INDICATORS	
1	Green: power supply
2	Red: unstable
3	Yellow: output

2 CHANNEL AMPLIFIER – FORM C RELAY

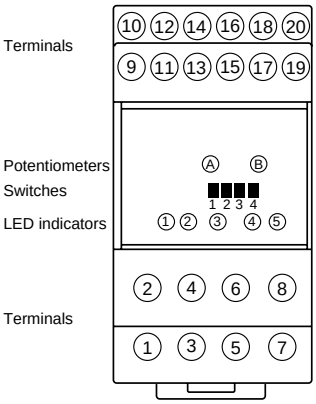

TERMINALS	
1	L1 Supply
2	L2 Supply
3	NC output, Channel 2
4	NC output, Channel 1
5	Common, Channel 2
6	Common, Channel 1
7	NO output, Channel 2
8	NO output, Channel 1
9	12 VDC output ⊖ for synchro sensors
10	12 VDC output ⊕ for synchro sensors
11	Synchronization, Channel 2, NPN
12	Synchronization, Channel 1, NPN
13	Emitter shield, Channel 1
14	Receiver, Channel 1 (white wire)
15	Emitter, Channel 1 (red wire)
16	Receiver shield, Channel 1
17	Emitter shield, Channel 2
18	Receiver, Channel 2 (white wire)
19	Emitter, Channel 2 (red wire)
20	Receiver shield, Channel 2

SWITCHES	
1	Monostable timer (pulse stretcher), Channel 1
2	Light/Dark, Channel 1
3	Monostable timer (pulse stretcher), Channel 2
4	Light/Dark, Channel 2
POTENTIOMETERS	
A	Sensitivity adjustment, Channel 1
B	Sensitivity adjustment, Channel 2
LED INDICATORS	
1	Green: power supply
2	Red: unstable, Channel 1
3	Yellow: output, Channel 1
4	Red: unstable, Channel 2
5	Yellow: output, Channel 2

2 CHANNEL LOGIC MODULE

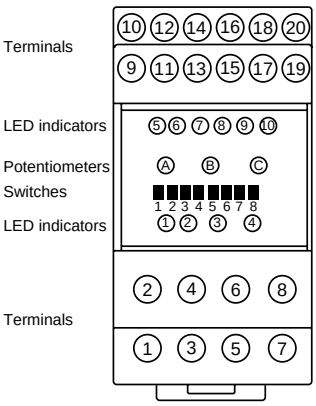

TERMINALS	
1	L1 Supply
2	L2 Supply
3	Output test (1 contact relay)
4	Output test (1 contact relay)
5	Channel 1 output (1 contact relay)
6	Channel 1 output (1 contact relay)
7	Channel 2 output (1 contact relay)
8	Channel 2 output (1 contact relay)
9	12 VDC output ⊖ for synchro sensors
10	12 VDC output ⊕ for synchro sensors
11	Synchronization, Channel 2, NPN
12	Synchronization, Channel 1, NPN
13	Emitter shield, Channel 1
14	Receiver, Channel 1 (white wire)
15	Emitter, Channel 1 (red wire)
16	Receiver shield, Channel 1
17	Emitter shield, Channel 2
18	Receiver, Channel 2 (white wire)
19	Emitter, Channel 2 (red wire)
20	Receiver shield, Channel 2

SWITCHES	
1	Time delay, Channel 1 (0.05 to 3 s or 1 to 60 s)
2	Time delay, Channel 1 (On/Off)
3	Time delay mode (mono. or adjustable time delay)
4	Leading/Trailing edge selection
5	Logic function (And/Or)
6	Logic function (On/Off)
7	Light/Dark, Channel 1
8	Light/Dark, Channel 2
POTENTIOMETERS	
A	Time delay, Channel 1
B	Sensitivity adjustment, Channel 1
C	Sensitivity adjustment, Channel 2
LED INDICATORS	
1	Green: power supply
2	Red: output test
3	Yellow: output, Channel 1
4	Yellow: output, Channel 2
5	Green: synchronization, Channel 1
6	Yellow: detection, Channel 1
7	Red: unstable, Channel 1
8	Green: synchronization, Channel 2
9	Yellow: detection, Channel 2
10	Red: unstable, Channel 2

AC Wiring Diagrams

Contact Forms for Class 9007 Limit Switches

FIG. 1

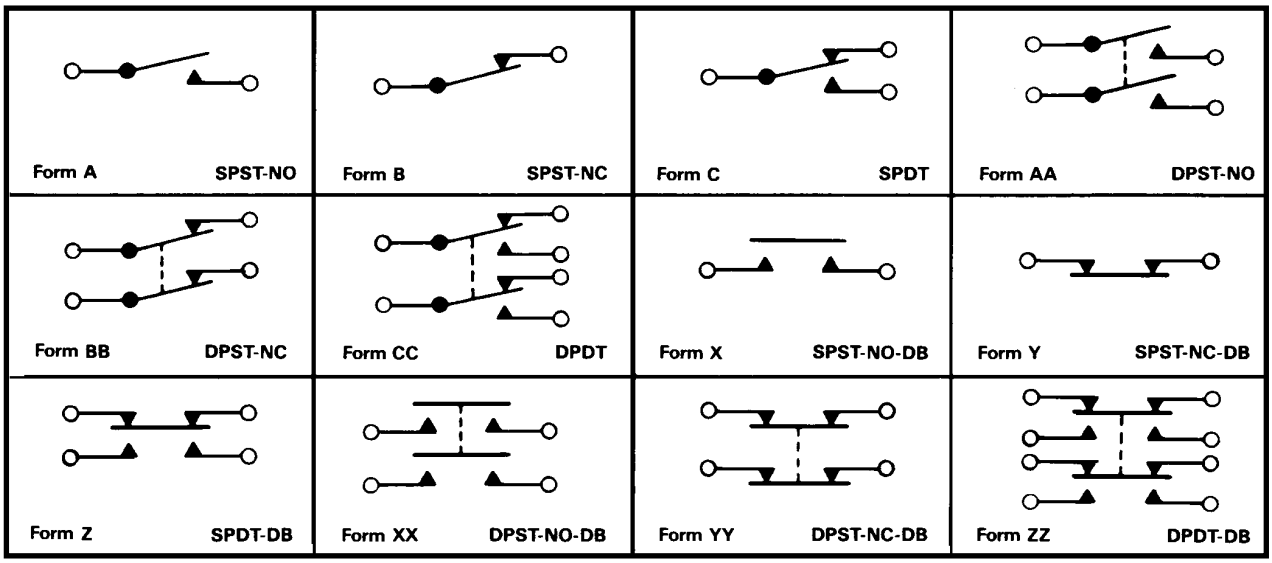

Limit Switches: Class 9007 Type C

FIG. 2

Types C52, C54
1-Pole

FIG. 3

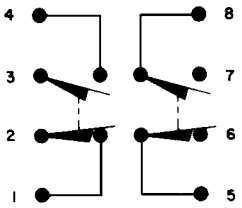

Type C62
2-Pole, Same Polarity Each Pole

FIG. 4

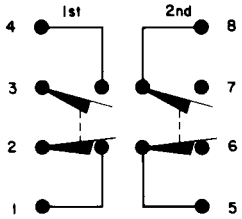

Type C66
2-Pole, 2-Stage, Same Polarity Each Pole

FIG. 5

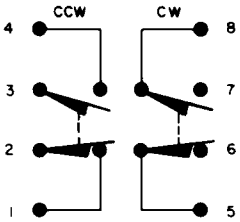

[1] On CR switches, terminals 1-4 on left side are for CW rotation and terminals 5-8 on right side are for CCW rotation.

Types C68T5, C68T10, CR67T5 [1] and CR67T10 [1]
2-Pole Neutral Position, Same Polarity Each Pole

FIG. 6

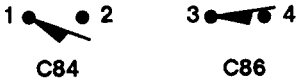

Type C Reeds

Limit Switches: Class 9007 Type XA

FIG. 7

Type XA73 Reeds

FIG. 8

Type XA75 Reeds

Limit Switches: Class 9007 Type AW

FIG. 1

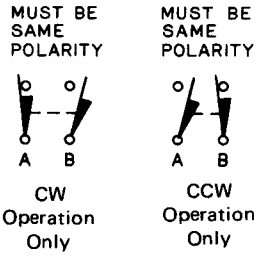

Type AW12 and AW14

FIG. 2

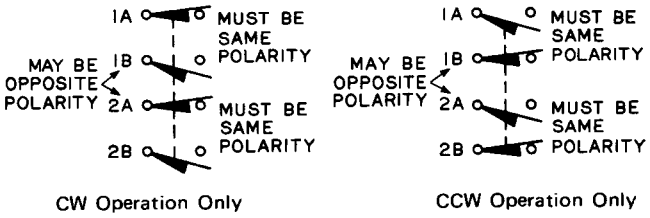

Type AW18

FIG. 3

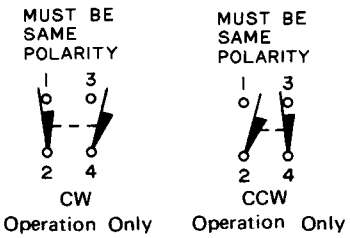

[1] If lever arm is placed at same end of box as conduit, N.O. contacts become N.C. and vice versa.

Type AW16
w/ Lever Arm Opposite Conduit Hole [1]

FIG. 4

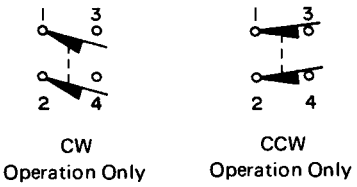

[1] If lever arm is placed at same end of box as conduit, N.O. contacts become N.C. and vice versa.

Type AW19
w/ Lever Arm Opposite Conduit Hole [1]

FIG. 5

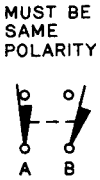

Type AW32, AW34, AW42 and AW44

FIG. 6

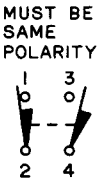

Type AW36 and AW46

FIG. 7

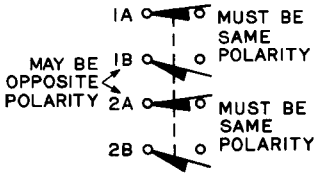

Type AW38 and AW48

FIG. 8

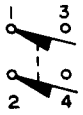

Type AW39 and AW49

Limit Switches: Class 9007 Type SG – GATE GARD™ Switch

FIG. 9

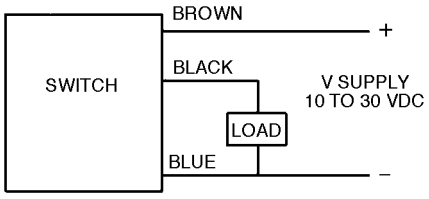

Type SGS1DK

FIG. 10

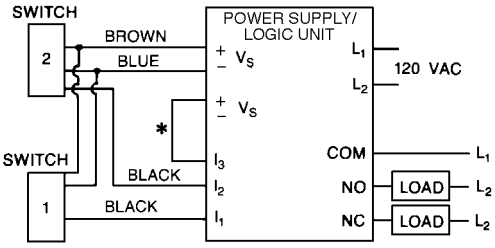

* Connect up to 3 switches for series operation. Unused inputs must be connected to +Vs for proper operation.

Type SGP1

XCK Limit Switches

FIG. 1

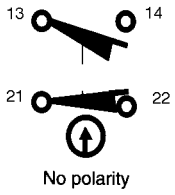

SPDT, 1 N.O. and 1 N.C.
Positive Opening, Snap Action

FIG. 2

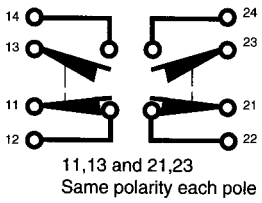

2 SPDT, 2 N.O. and 2 N.C.

FIG. 3

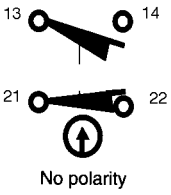

SPDT, Isolated N.O. and N.C.
Positive Opening, Slow-Make Slow-Break

XCK Safety Interlocks

FIG. 4

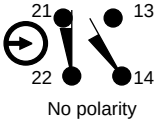

SPDT, Positive Opening,
Slow-Make Slow-Break

FIG. 5

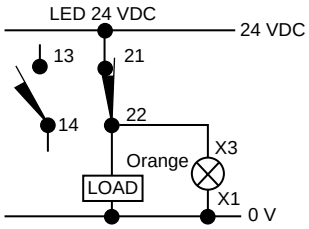

SPDT, w/ 24 VDC LED, Positive Opening,
Slow-Make Slow-Break

FIG. 6

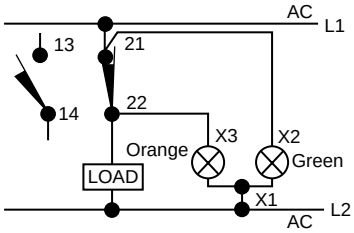

SPDT, w/ 2 Pilot Lights, Positive Opening,
Slow-Make Slow-Break

Note: N.O. and N.C. contacts are shown with key inserted and fully engaged.

Contact Blocks for XY2CE Limit Switches

FIG. 7

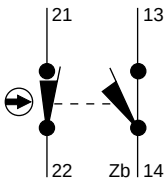

XEN P2151, Isolated N.C.
and N.O.

FIG. 8

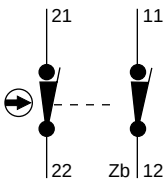

XEN P2141, Isolated N.C.
and N.O.

FIG. 9

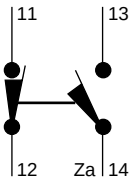

XEN P2051, N.C./N.O.,
12 and 14 same polarity

FIG. 10

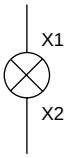

Indicator Light, Direct

FIG. 11

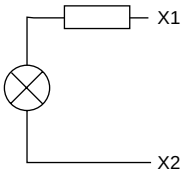

Indicator Light
w/ Resistance

MS Miniature Limit Switches

FIG. 12

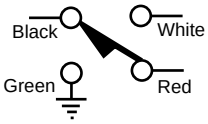

SPST

FIG. 13

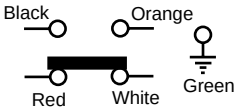

SPDT

Pressure and Temperature Switches: Class 9012 and 9025 Type G

FIG. 1

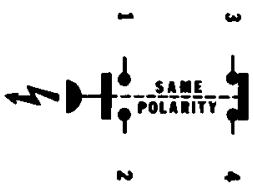

Machine Tool, SPDT,
1 N.O. and 1 N.C.

FIG. 2

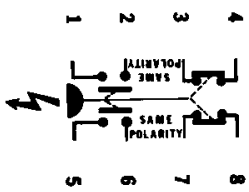

Machine Tool, DPDT,
2 N.O. and 2 N.C.

FIG. 3

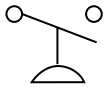

Industrial, SPST,
1 N.O. and 1 N.C.

FIG. 4

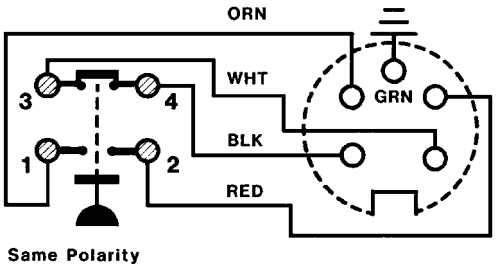

Machine Tool, SPDT, 1 N.O. and 1 N.C. w/ Form H10

FIG. 5

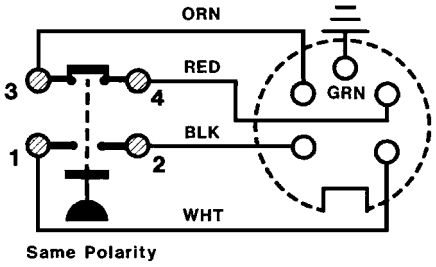

Machine Tool, SPDT, 1 N.O. and 1 N.C. w/ Form H11

Commercial Pressure Switches: Class 9013 Type CS

FIG. 6

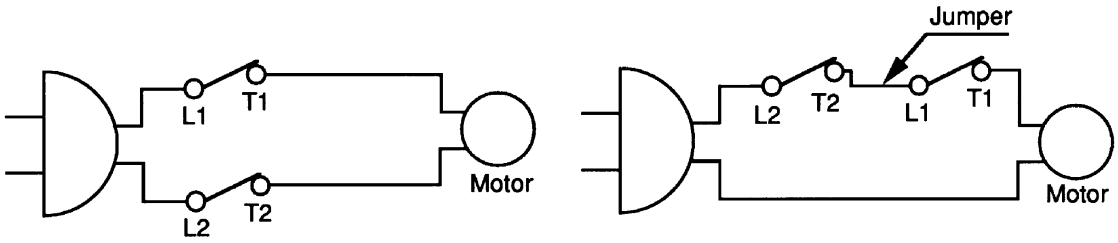

Acceptable Wiring Schematics

Pressure Transducers: Class 9022 Type PTA and PTB

FIG. 7

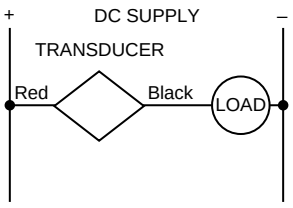

Type PTA, 2-Wire

FIG. 8

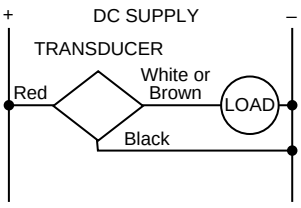

Type PTA, 3-Wire

FIG. 9

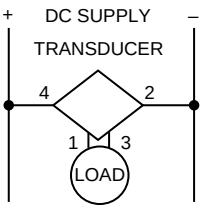

Type PTA, 4-Wire

FIG. 10

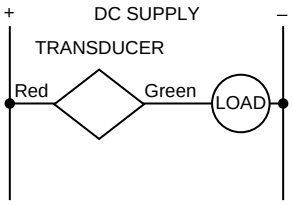

Type PTB, 2-Wire

FIG. 11

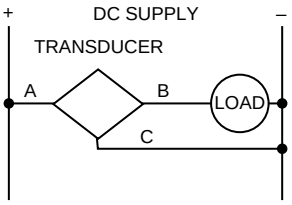

Type PTB, 3-Wire

FIG. 12

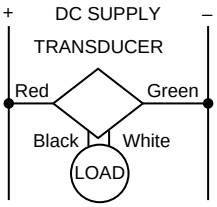

Type PTB, 4-Wire

Level Sensors: Class 9034 Types LSD and LSV

FIG. 1

Wiring Diagram

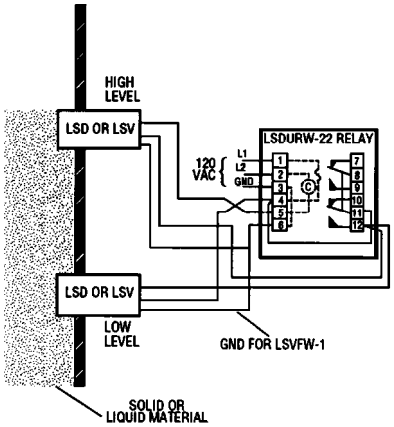

Elementary Diagram

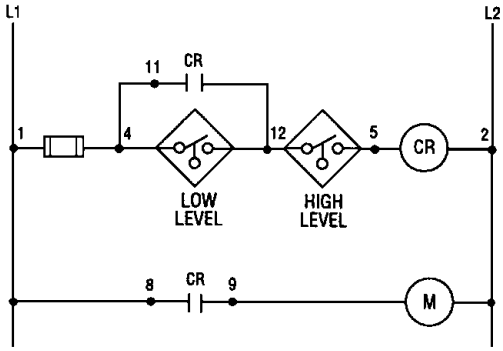

Output selection of both sensors in maximum (N.C. when absent). Both devices at max. setting.

Fill Cycle, Tank Full

FIG. 2

Wiring Diagram

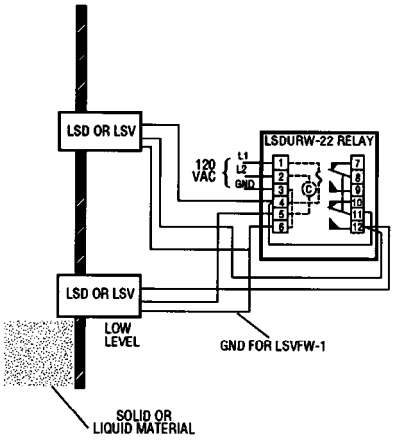

Elementary Diagram

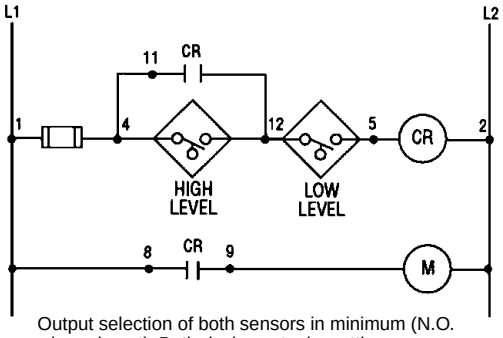

Output selection of both sensors in minimum (N.O. when absent). Both devices at min. setting.

Drain Cycle, Tank Empty

Electric Alternators: Class 9039 Type X

FIG. 3

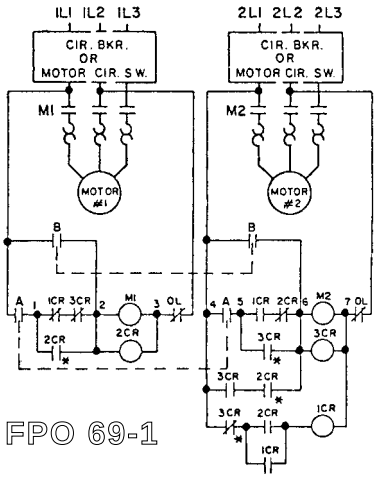

Set pilot device A contacts to close before pilot device B contacts.

Connections shown are for common control. If motor line voltage is different from voltage rating stamped on alternator coil terminals, alternator must be connected to motor lines thru control transformers.

Control circuit conductors require overcurrent protection in accordance with applicable electrical codes.

* Overlapping contact.

We Respond.®

Pneumatic Timing Relays: Class 9050: Type AO

FIG. 1
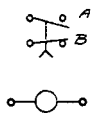

Type AO10E

FIG. 2
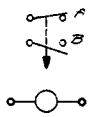

Type AO10D

FIG. 3
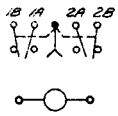

Type AO20E

FIG. 4
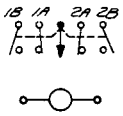

Type AO20D

FIG. 5
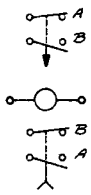

Type AO110DE

FIG. 6
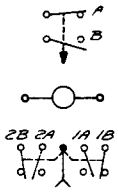

Type AO120DE

FIG. 7
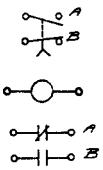

Type AO11E

FIG. 8
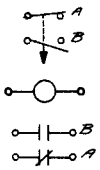

Type AO11D

FIG. 9
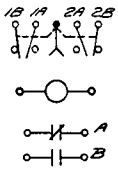

Type AO21E

FIG. 10
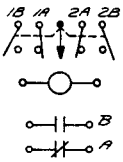

Type AO21D

FIG. 11
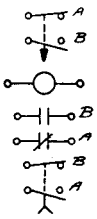

Type AO111DE

FIG. 12
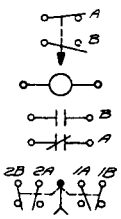

Type AO121DE

FIG. 13
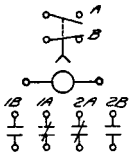

Type AO12E

FIG. 14
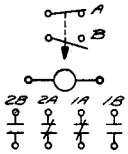

Type AO12D

FIG. 15
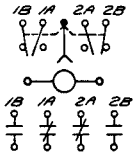

Type AO22E

FIG. 16
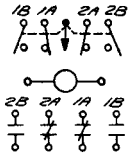

Type AO22D

FIG. 17
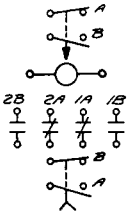

Type AO112DE

FIG. 18
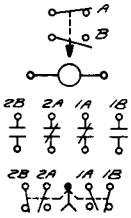

Type AO122DE

FIG. 19
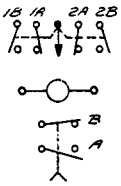

Type AO210DE

FIG. 20
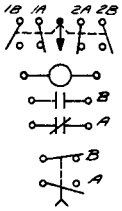

Type AO211DE

FIG. 21
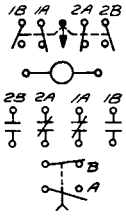

Type AO212DE

FIG. 22
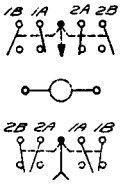

Type AO220DE

FIG. 23
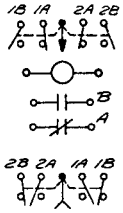

Type AO221DE

FIG. 24
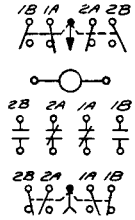

Type AO222DE

Pneumatic Timing Relays: Class 9050: Type HO

FIG. 25
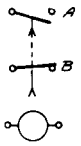

Type HO10E, On Delay

FIG. 26
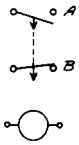

Type HO10D, Off Delay

Pneumatic Timing Relays: Class 9050: Types B and C

FIG. 27
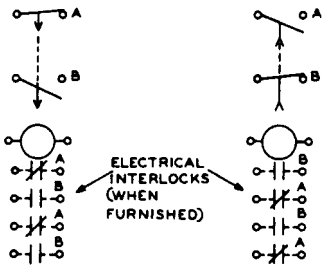

Off Delay On Delay

Type B

FIG. 28
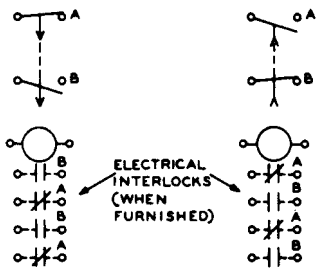

Off Delay On Delay

Type C

Class 9050 Pneumatic Timing Relays: Typical Elementary Diagrams

FIG. 1

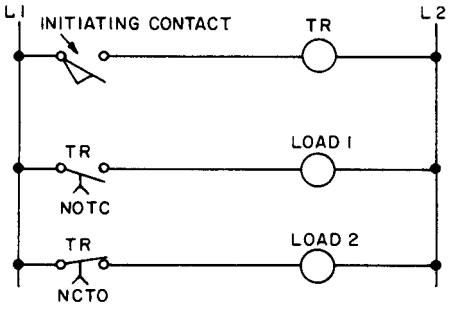

On Delay

FIG. 2

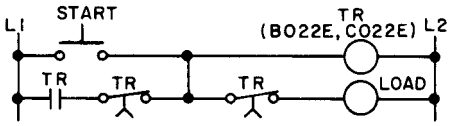

Interval, Momentary Start

FIG. 3

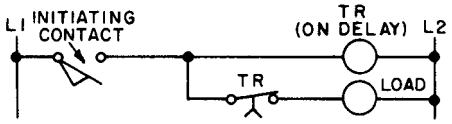

Interval, Maintained Start

FIG. 4

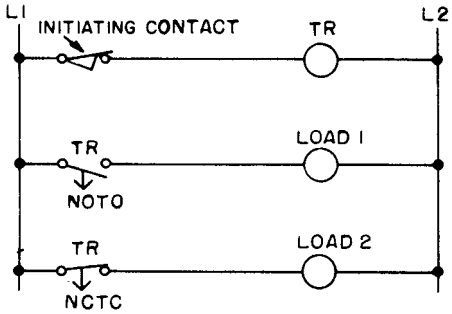

Off Delay

FIG. 5

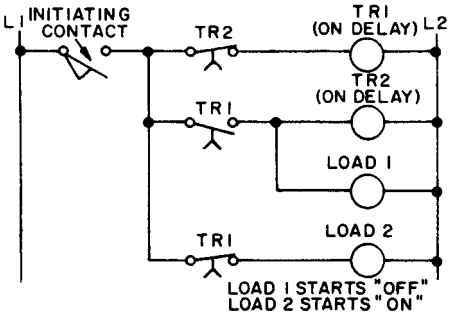

Repeat Cycle

Solid State Industrial Timing Relays: Class 9050 Types FS and FSR

FIG. 6

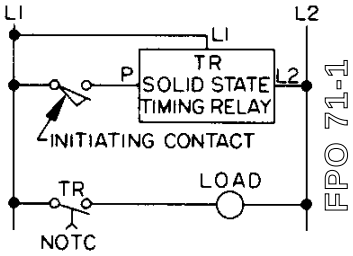

Elementary Diagram

FIG. 7

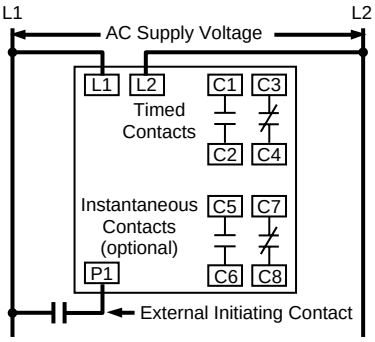

Wiring Diagram

Solid State Industrial Timing Relays: Class 9050 Type FT

FIG. 8

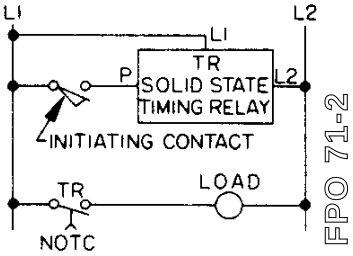

Elementary Diagram

FIG. 9

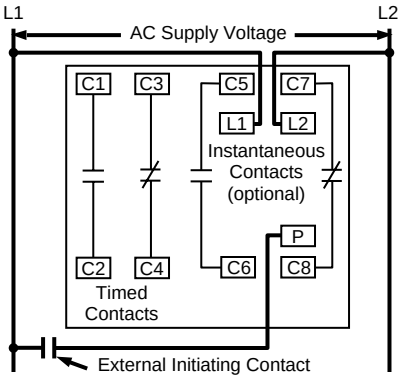

Wiring Diagram

We Respond.®

Solid State Industrial Timing Relays: Class 9050 Type JCK

FIG. 1

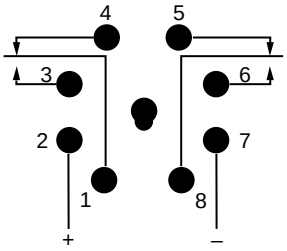

Control Power
Polarity markings are for DC units only. JCK 60 is AC only.

Type JCK 11-19, 31-39 and 51-60

FIG. 2

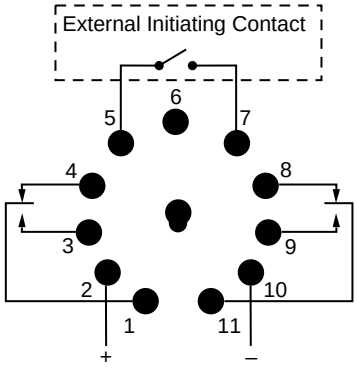

Control Power
Polarity markings are for DC units only.

Terminals 5 and 10 are internally jumpered. Applying power to terminal 7 or jumpering from terminal 5 to 7 through an external contact initiates the timer.

Type JCK 21-29 and 41-49

FIG. 3

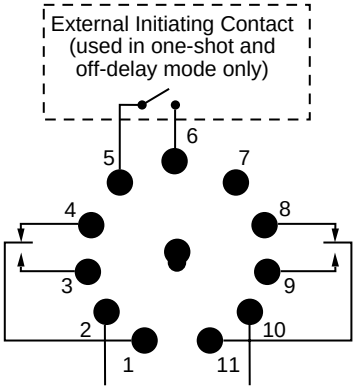

Control Power

Type JCK 70

Solid State Timers: Class 9050 Type D

FIG. 4

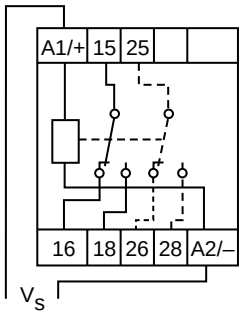

Type DER, DZM, DTR, DWE, DEW and DBR

FIG. 5

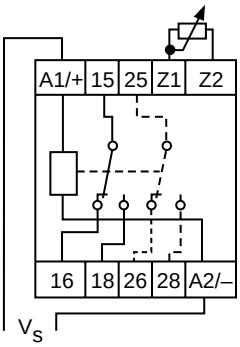

Type DERP, DERLP, DWEP and DZMP

FIG. 6

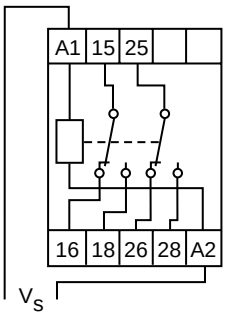

Type DAR

FIG. 7

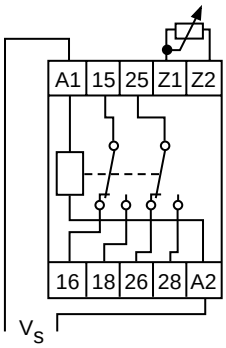

Type DARP

Solid State Timers: Class 9050 Type M

FIG. 8

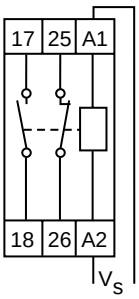

Type MAN, MBR, MER, MEW, MTG, MWE and MZM

FIG. 9

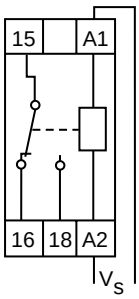

Type MAR

Transformer Disconnects: Class 9070

Note: Some factory modifications, depending on enclosure and transformer VA size selected, are not available. Consult factory modification chart.

FIG. 1

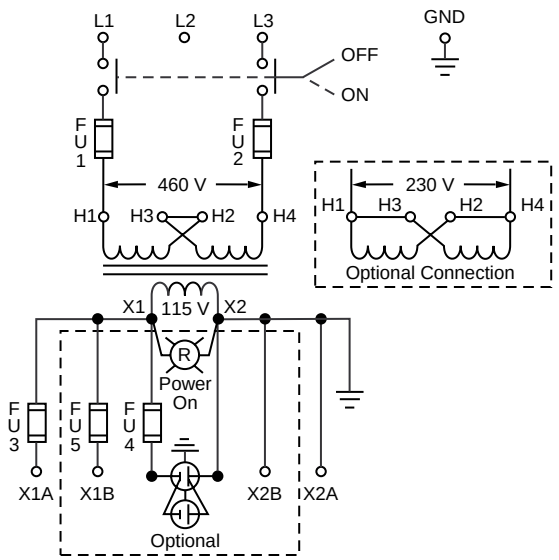

For Size 1 Enclosures except w/ Form E23

FIG. 2

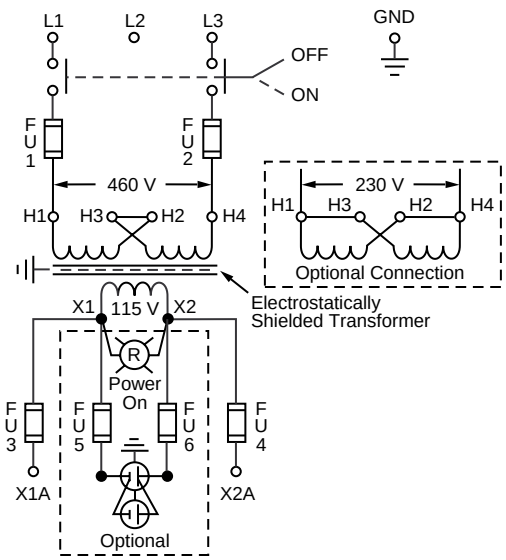

For Size 1 Enclosures w/ Form E23

FIG. 3

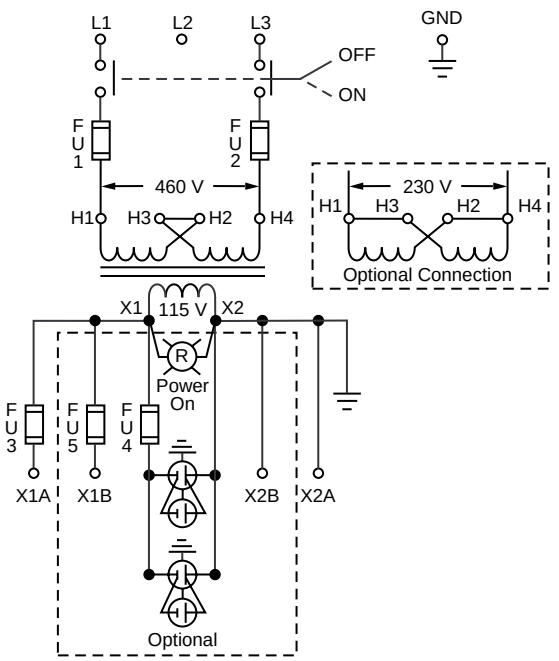

For Size 2 Enclosures except w/ Form E23

FIG. 4

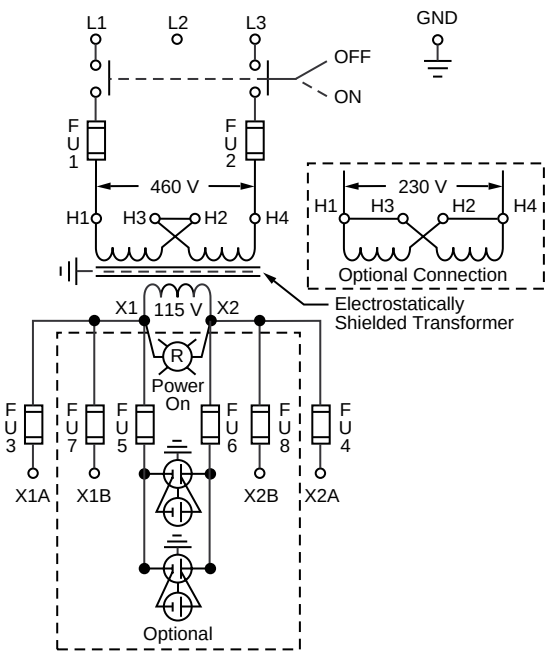

For Size 2 Enclosures w/ Form E23

We Respond.®

Table 6 Enclosures for Non-Hazardous Locations

Provides Protection Against	NEMA Type 1	NEMA Type 3 [1]	NEMA Type 3R [1]	NEMA Type 4 [2]	NEMA Type 4X [2]	Type 5	NEMA Type 12 [3]	Type 12K	NEMA Type 13
Accidental contact w/ enclosed equipment	Yes	Yes	Yes	Yes	Yes	Yes	Yes	Yes	Yes
Falling dirt	Yes	Yes	Yes	Yes	Yes	Yes	Yes	Yes	Yes
Falling liquids and light splashing	…	Yes	Yes	Yes	Yes	…	Yes	Yes	Yes
Dust, lint, fibers and flyings	…	…	…	Yes	Yes	Yes	Yes	Yes	Yes
Hosedown and splashing water	…	…	…	Yes	Yes	…	…	…	…
Oil and coolant seepage	…	…	…	…	…	…	Yes	Yes	Yes
Oil and coolant spraying and splashing	…	…	…	…	…	…	…	…	Yes
Corrosive agents	…	…	…	…	Yes	…	…	…	…
Rain, snow and sleet [4]	…	Yes	Yes	[5]	Yes	…	…	…	…
Windblown dust	…	Yes	…	[5]	Yes	Yes	…	…	…

[1] Intended for outdoor use.
[2] Intended for indoor and outdoor use.
[3] Square D Industrial Control design NEMA Type 12 enclosures may be field modified for outdoor applications.
[4] External operating mechanisms are not required to be operable when the enclosure is ice covered.
[5] Square D Industrial Control design NEMA Type 4 enclosures provide protection against these environments.

Table 7 Enclosures for Hazardous Locations

Provides Protection Against	Class [1]	Group [1]	Enclosure					
			NEMA Type 7			NEMA Type 9		
			7B	7C	7D	9E	9F	9G
Hydrogen, manufactured gas	I	B	Yes	…	…	…	…	…
Ethyl ether, ethylene, cyclopropane	I	C	Yes	Yes	…	…	…	…
Gasoline, hexane, naphtha, benzine, butane, propane, alcohol, acetone, benzol, natural gas, lacquer solvent	I	D	Yes	Yes	Yes	…	…	…
Metal dust	II	E	…	…	…	Yes	…	…
Carbon black, coal dust, coke dust	II	F	…	…	…	…	Yes	…
Flour, starch, grain dust	II	G	…	…	…	…	Yes	Yes

[1] As described in Article 500 of the National Electrical Code.

Ampacity Based on NEC® Table 310-16 — Allowable Ampacities of Insulated Conductors Rated 0-2000 Volts, Not More Than Three Conductors in Raceway or Cable. Based on 30 °C Ambient Temperature. Trade Size of Conduit or Tubing Based on NEC Chapter 9, Table 1 and Tables 3A, 3B, 3C, 4 and 5B. Refer to Chapter 9 for Maximum Number of Conductors in Trade Sizes of Conduit or Tubing. Dimensions of Insulated Conductors for Conduit Fill Determined from NEC Chapter 9 Tables 5 and 5A.

For information on temperature ratings of terminations to equipment, see NEC Section 110-14c. Underlined conductor insulation types indicates ampacity is for WET locations. See NEC Table 310-13.

Table 8 Conductor Ampacity based on NEC Table 310-16

COPPER CONDUCTORS									ALUMINUM CONDUCTORS								
	75 °C (167 °F) Conductor Insulation [1]					90 °C (194 °F) Conductor Insulation [1]				75 °C (167 °F) Conductor Insulation [1]					90 °C (194 °F) Conductor Insulation [1]		
Wire Size AWG kcmil	Table 310-16 Ampacity Insulated Copper	THHW, THW, RW, USE		THWN, XHHW		Table 310-16 Ampacity Insulated Copper	THHN, XHHW		Wire Size AWG kcmil	Table 310-16 Ampacity Insulated Copper	THHW, THW, USE		XHHW		Table 310-16 Ampacity Insulated Copper	THHN, XHHW	
		Conduit 3W	Conduit 4W [2]	Conduit 3W	Conduit 4W [2]		Conduit 3W	Conduit 4W [2]			Conduit 3W	Conduit 4W [2]	Conduit 3W	Conduit 4W [2]		Conduit 3W	Conduit 4W [2]
†14	20	…	…	1/2	1/2	25	1/2	1/2	…	…	…	…	…	…	…	…	…
†12	25	…	…	1/2	1/2	30	1/2	1/2	†12	20	…	…	1/2	1/2	25	1/2	1/2
†10	35	…	…	1/2	1/2	40	1/2	1/2	†10	30	…	…	1/2	1/2	35	1/2	1/2
8	50	3/4	1	1/2 [3]	3/4	55	1/2 [3]	3/4	8	40	3/4	3/4	1/2	3/4	45	1/2	3/4
6	65	1	1	3/4	3/4 [4]	75	3/4	3/4 [4]	6	50	3/4	1	3/4	3/4	60	3/4	3/4
4	85	1	1-1/4	1	1	95	1	1	4	65	1	1	3/4	1	75	3/4	1
3	100	1-1/4	1-1/4	1	1-1/4	110	1	1-1/4	3	75	…	…	…	…	85	…	…
2	115	1-1/4	1-1/4	1	1-1/4	130	1	1-1/4	2	90	1	1-1/4	1	1-1/4	100	1	1-1/4
1	130	1-1/4	1-1/2	1-1/4	1-1/2	150	1-1/4	1-1/2	1	100	1-1/4	1-1/2	1-1/4	1-1/2	115	1-1/4	1-1/2
1/0	150	1-1/2	2	1-1/4	1-1/2	170	1-1/4	1-1/2	1/0	120	1-1/4	1-1/2	1-1/4	1-1/2	135	1-1/4	1-1/2
2/0	175	1-1/2	2	1-1/2	2	195	1-1/2	2	2/0	135	1-1/2	2	1-1/4	1-1/2	150	1-1/4	1-1/2
3/0	200	2	2	1-1/2	2	225	1-1/2	2	3/0	155	1-1/2	2	1-1/2	2	175	1-1/2	2
4/0	230	2	2-1/2	2	2	260	2	2	4/0	180	2	2	1-1 /2	2	205	1-1/2	2
250	255	2-1/2	2-1/2	2	2-1/2	290	2	2-1/2	250	205	2	2-1/2	2	2	230	2	2
300	285	2-1/2	3	2	2-1/2	320	2	2-1/2	300	230	2	2-1/2	2	2-1/2	255	2	2-1/2
350	310	2-1/2	3	2-1/2	3	350	2-1/2	3	350	250	2-1/2	3	2-1/2	3	280	2-1/2	3
400	335	3	3	2-1/2	3	380	2-1/2	3	400	270	2-1/2	3	2-1/2	2-1/2 [5]	305	2-1/2	2-1/2 [5]
500	380	3	3-1/2	3	3	430	3	3	500	310	3	3	2-1/2	3	350	2-1/2	3
600	420	3	3-1/2	3	3-1/2	475	3	3-1/2	600	340	3	3-1/2	3	3	385	3	3
700	460	3-1/2	4	3	3-1/2	520	3	3-1/2	700	375	3	3-1/2	3	3-1/2	420	3	3-1/2
750	475	3-1/2	4	3-1/2	4	535	3-1/2	4	750	385	3	3-1/2	3	3-1/2	435	3	3-1/2
800	490	3-1/2	4	3-1/2	4	555	3-1/2	4	800	395	…	…	…	…	450	…	…
900	520	4	5	3-1/2	4	585	3-1/2	4	900	425	…	…	…	…	480	…	…
1000	545	4	5	3-1/2	5	615	3-1/2	5	1000	445	3-1/2	4	3-1/2	4	500	3-1/2	4

[1] Unless otherwise permitted in the Code, the overcurrent protection for conductor types marked with an with an obelisk (†) shall not exceed 15 A for No. 14, 20 A for No. 12 and 30 A for No. 10 copper, or 15 A for No. 12 and 25 A for No. 10 aluminum after any correction factors for ambient temperature and number of conductors have been applied.

[2] On a 4-wire, 3-phase wye circuit where the major portion of the load consists of nonlinear loads such as electric discharge lighting, electronic computer/data processing, or similar equipment there are harmonic currents present in the neutral conductor and the neutral shall be considered to be a current-carrying conductor.

[3] #8 XHHW copper wire requires 3/4" conduit for 3W.

[4] #6 XHHW copper wire requires 1" conduit for 3Ø4W.

[5] 400 kcmil aluminum wire requires 3" conduit for 3Ø4W.

NEC is a Registered Trademark of the National Fire Protection Association.

We Respond.®

Ampacity Correction Factors:
For ambient temperatures other than 30 °C (86 °F), multiply the ampacities listed in Table 8 by the appropriate factor listed in Table 9.

Adjustment Factors:
Where the number of current-carrying conductors in a raceway or cable exceeds three, reduce the allowable ampacities as shown in Table 9.

Table 9 Ampacity Correction Factors

Ambient Temperature (°C)	75 °C (167 °F) Conductors	90 °C (194 °F) Conductors	Ambient Temperature (°F)
21-25	1.05	1.04	70-77
26-30	1.00	1.00	78-86
31-35	.94	.96	87-95
36-40	.88	.91	96-104
41-45	.82	.87	105-113
46-50	.75	.82	114-122
51-55	.67	.76	123-131
56-60	.58	.71	132-140
61-70	.33	.58	141-158
71-80	…	.41	159-176

Table 10 Adjustment Factors

No. of Current-Carrying Inductors	Values in Tables as Adjusted for Ambient Temperature
4-6	80%
7-9	70%
10-20	50%
21-30	45%
31-40	40%
41 and above	35%

For exceptions, see exceptions to Note 8 of NEC® Table 310-16.

Ratings for 120/240 V, 3-Wire, Single-Phase Dwelling Services:
The ratings in Table 11 are permitted ratings for dwelling unit service and feeder conductors which carry the total load of the dwelling. The grounded conductor (neutral) shall be permitted to be not more than 2 AWG sizes smaller than the ungrounded conductors, provided the requirements of 215-2, 220-22 and 230-42 are met.

Table 11 Ratings for 120/240 V, 3-Wire, Single-Phase Dwelling Services – see NEC 310-16 Note 3

Rating (A)	100	110	125	150	175	200	225	250	300	350	400
Copper	4 AWG	3 AWG	2 AWG	1 AWG	1/0 AWG	2/0 AWG	3/0 AWG	4/0 AWG	250 kcmil	350 kcmil	400 kcmil
Aluminum	2 AWG	1 AWG	1/0 AWG	2/0 AWG	3/0 AWG	4/0 AWG	250 kcmil	300 kcmil	350 kcmil	500 kcmil	600 kcmil

NEC 240-3 Protection of Conductors:
Conductors, other than flexible cords and fixture wires, shall be protected against overcurrent in accordance with their ampacities as specified in NEC Section 310-15, unless otherwise permitted in parts (a) through (m).

NEC 220-3 (a) Continuous and Noncontinuous Loads:
The branch circuit rating shall not be less than the noncontinuous load plus 125% of the continuous load (see exception for 100% rated devices).

NEC 220-10 (b) Continuous and Noncontinuous Loads:
Where a feeder supplies continuous loads or any combination of continuous and noncontinuous loads, the rating of the overcurrent device shall not be less than the noncontinuous load plus 125% of the continuous load (see exception for 100% rated devices).

NEC 430-22 (a) Single Motor Circuit Conductors:
Branch circuit conductors supplying a single motor shall have an ampacity not less than 125% of the motor full-load current rating (see exceptions).

NEC is a Registered Trademark of the National Fire Protection Association.

Table 12 AWG and Metric Wire Data

AWG Size	Conductor dia. (mm)	Conductor dia. (in)	Resistance @ 20 °C (68 °F) Ohm per ft	Ohm per m
29		.01126	.08180	.2684
	.315	.01240	.06743	.2212
28		.01264	.06491	.2130
	.355	.01398	.05309	.1742
27		.01420	.05143	.1687
	.400	.01575	.04182	.1372
26		.01594	.04082	.1339
	.450	.01772	.03304	.1084
25		.01790	.03237	.1062
	.500	.01969	.02676	.08781
24		.02010	.02567	.08781
	.560	.02205	.02134	.07000
23		.02257	.02036	.06679
	.630	.02480	.01686	.05531
22		.02535	.01614	.05531
	.710	.02795	.01280	.04201
21		.02846	.01280	.04201
	.750	.02953	.01190	.03903
	.800	.03150	.01045	.03430
20		.03196	.01015	.03331
	.850	.03346	.009261	.05038
	.900	.03543	.008260	.02642
19		.03589	.008051	.02642
	.950	.03740	.007414	.02432
	1.000	.03937	.006991	.02195
18		.04030	.006386	.02095
	1.060	.04173	.005955	.01954
	1.120	.04409	.005334	.01750
17		.04526	.005063	.01661
	1.180	.04646	.004805	.01577
	1.250	.04921	.004282	.01405
16		.05082	.004016	.01317
	1.320	.05197	.003840	.01260
	1.400	.05512	.004016	.01317
15		.05707	.003414	.01045
	1.500	.05906	.002974	.009756
	1.600	.06299	.002526	.008286
14		.06408	.002315	.007596
	1.700	.06693	.002315	.007596
	1.800	.07087	.002065	.006775
13		.07196	.002003	.006571
13	1.900	.07480	.001853	.006081
	2.000	.07874	.001673	.005488
12		.08081	.001588	.005210
	2.120	.08346	.001489	.004884
	2.240	.08819	.001333	.004375
11		.09074	.001260	.004132
	2.360	.09291	.001201	.003941
	2.500	.09843	.001071	.003512
10		.1019	.0009988	.003277
	2.650	.1043	.0009528	.003126
	2.800	.1102	.0008534	.002800
9		.1144	.0007924	.002500
	3.000	.1181	.0007434	.002439
	3.150	.1240	.0006743	.002212
8		.1285	.0006281	.002061
	3.350	.1319	.0005662	.001956
	3.550	.1398	.0005309	.001742
7		.1443	.0004981	.001634
	3.750	.1476	.0004758	.001561
	4.000	.1575	.0004182	.001372
6		.1620	.0003952	.001296
	4.250	.1673	.0003704	.001215
	4.500	.1772	.0003304	.001084
5		.1819	.0003134	.001028
	4.750	.1870	.0002966	.0009729
	5.000	.1968	.0002676	.0008781
4		.2043	.0002485	.0008152
	5.600	.2205	.0002134	.0007000
3		.2294	.0001971	.0006466
	6.300	.2480	.0001686	.0005531
2		.2576	.0001563	0005128
	7.100	.2795	.0001327	.0004355
1		.2893	.0001239	.0004065
	8.000	.3150	.0001045	.0003430
0		.3249	.00009825	.0003223
	9.000	.3543	.00008260	.0002710
2/0		.3648	.00007793	.0002557
	10.000	.3937	.00006691	.0002195
3/0		.4096	.00006182	.0002195
4/0		.4600	.00004901	.0001608
	11.800	.4646	.00004805	.0001577

We Respond.®

Table 13 Electrical formulas for Amperes, Horsepower, Kilowatts and KVA

To find	Single phase	3-phase	Direct current
Kilowatts	$\frac{I \times E \times PF}{1000}$	$\frac{I \times E \times 1.73 \times PF}{1000}$	$\frac{I \times F}{1000}$
KVA	$\frac{I \times E}{1000}$	$\frac{I \times E \times 1.73}{1000}$	—
Horsepower (output)	$\frac{I \times E \times \% Eff \times PF}{746}$	$\frac{I \times E \times 1.73 \times \%Eff \times PF}{746}$	$\frac{I \times E \times \%Eff}{746}$
Amperes when Horsepower is known	$\frac{HP \times 746}{E \times \%Eff \times PF}$	$\frac{HP \times 746}{1.73 \times E \times \%Eff \times PF}$	$\frac{HP \times 746}{E \times \%Eff}$
Amperes when Kilowatts is known	$\frac{KW \times 1000}{E \times PF}$	$\frac{KW \times 1000}{1.73 \times E \times PF}$	$\frac{KW \times 1000}{E}$
Amperes	$\frac{KVA \times 1000}{E}$	$\frac{KVA \times 1000}{1.73 \times E}$	—

E=Volts I = Amperes %Eff = Percent efficiency PF = Power factor HP = Horsepower KVA = Kilovolt-Amps

Average Efficiency and Power Factor Values of Motors:

When actual efficiencies and power factors of the motors to be controlled are not known, the following approximations may be used:

Efficiencies:

DC motors, 35 hp and less:	80% to 85%
DC motors, above 35 hp:	85% to 90%
Synchronous motors (at 100% PF):	92% to 95%

"Apparent" efficiencies (Efficiency x PF):

3-phase induction motors, 25 hp and less:	70%
3-phase induction motors above 25 hp:	80%

Decrease these figures slightly for single phase induction motors.

Table 14 Ratings for 3-Phase, Single-Speed, Full-Voltage Magnetic Controllers for Nonplugglng and Nonjogging Duty

Size of Controller	Continous Current Rating (A)	Horsepower at [1]				Service-Limit Current Rating (A)
		60 Hz 200 V	60 Hz 230 V	50 Hz 380 V	60 Hz 460 or 575 V	
00	9	1-1/2	1-1/2	1-1/2	2	11
0	18	3	3	5	5	21
1	27	7-1/2	7-1/2	10	10	32
2	45	10	15	25	25	52
3	90	25	30	50	50	104
4	135	40	50	75	100	156
5	270	75	100	150	200	311
6	540	150	200	300	400	621
7	810	—	300	—	600	932

[1] These horsepower ratings are based on typical locked-rotor current ratings. For motors having higher locked-rotor currents, use a larger controller to ensure its locked-rotor current rating is not exceeded.

Table 15 Ratings for 3-Phase, Single-Speed, Full-Voltage Magnetic Controllers for Plug-Stop, Plug-Reverse or Jogging Duty

Size of Controller	Continous Current Rating (A)	Horsepower at [1]				Service-Limit Current Rating (A)
		60 Hz 200 V	60 Hz 230 V	50 Hz 380 V	60 Hz 460 or 575 V	
0	18	1-1/2	1-1/2	1-1/2	2	21
1	27	3	3	5	5	32
2	45	7-1/2	10	15	15	52
3	90	15	20	30	30	104
4	135	25	30	50	60	156
5	270	60	75	125	150	311
6	540	125	150	250	300	621

[1] These horsepower ratings are based on typical locked-rotor current ratings. For motors having higher locked-rotor currents, use a larger controller to ensure its locked-rotor current rating is not exceeded.

Table 16 Power Conversions

From	to kW	to PS	to hp	to ft-lb/s
1 kW (kilowatt) = 10^{10} erg/s	1	1.360	1.341	737.6
1 PS (metric horsepower)	0.7355	1	0.9863	542.5
1 hp (horsepower)	0.7457	1.014	1	550.0
1 ft-lb/s (foot-pound per sec)	1.356×10^{-3}	1.843×10^{-3}	1.818×10^{-3}	1

We Respond.®

From single products to complete systems, look to Square D.

Square D Company is a leading manufacturer and supplier of electrical distribution, automation and industrial control products. The full line of Square D and Telemecanique brand products are available from an extensive network of Square D distributors located throughout North America.

Square D Company is part of Groupe Schneider, an $11 billion global manufacturer of electrical distribution, automation and industrial equipment, a company whose primary business resides in those markets.

Square D has been serving industrial and construction markets, as well as public utilities, individual consumers and government agencies for over 85 years. We offer unsurpassed quality, innovative design and a committed staff of trained sales representatives and service technicians willing to stand behind every product we sell.

For further information on how we can help fill your electrical needs, call your local Square D field representative or authorized Square D distributor.

Square D Company
Automation and Control Business
P.O. Box 27446, Raleigh, N.C. 27611, USA

Square D Canada
6675 Rexwood Road
Mississauga, Ontario L4V 1V1

Square D Company Mexico, SA de C.V.
Calz. Javier Rojo Gomez No. 1121
Col. Guadalupe del Moral, Iztapalapa
09300 Mexico D.F., Mexico

0140CT9201 (Supersedes SM304R10)
Printed in USA © 1993 Square D All Rights Reserved

SQUARE D
GROUPE SCHNEIDER